sferaco
VALVES, METERS & FITTINGS

ISO 9001 : 2015
BUREAU VERITAS
Certification

REF. 1181

CONCENTRIC GAS LUG BUTTERFLY VALVE EXCELLENCE RANGE TTV DUCTILE IRON BODY-STAINLESS STEEL/DUCITLE IRON DISC AND NBR SEAT

Lug butterfly valves TTV excellence range for closing or setting networks of gas.
Valves with NF ROB-GAZ certification by Certigaz, 10 years warranty.
Ductile iron body EN GJS-500-7, stainless steel disc up to DN100 and NBR Gas seat.
Between flanges PN10, PN16 according to the DN.
Compatible with explosive atmosphere, ATEX Zone 1&21 and Zone 2&22 on request.

CERTIFIÉ PAR CERTIGAZ NF ROB-GAZ

Certificate 3.1

Lloyd's Register PED/2014/68/UE

WARRANTY 10 years MANUFACTURE *





TTV

Reinforced lug for DN200

Size :	DN40 to DN200
Connection :	Between flanges PN10/16 (PN10 for DN200)
Min Temperature :	-20°C
Max Temperature :	+60°C
Max Pressure :	5 Bars
Specifications :	Long neck for isolation Lug type Full crossing stem ISO 5211 direct mounting pad
Materials :	Ductile iron body GJS 500-7, NBR Gas seat

*the installation defects and wear defects are not covered by the guarantee

Sferaco 90 rue du Ruisseau 38297 St Quentin Fallavier Tel: + 33 (0) 474.94.15.90 Fax: + 33 (0) 474.95.62.08 Internet: www.sferaco.com E-mail : info@sferaco.fr

Information provided as an indication and subject to possible modification

CONCENTRIC GAS LUG BUTTERFLY VALVE EXCELLENCE RANGE TTV
DUCTILE IRON BODY-STAINLESS STEEL/DUCITLE IRON DISC AND NBR SEAT

SPECIFICATIONS :

- Long neck for isolation
- ISO 5211 mounting pad
- Lug type (Reinforced lug for DN200)
- Between PN10/16 flanges (PN10 for DN200)
- **Certificate NF ROBGAZ**
- Full crossing stem
- Removable NBR gas seat, dovetail type above DN40
- Stainless steel disc up to DN100 included and chromed ductile iron disc from DN125 to 200
- 9 positions lever with locking device
- Rilsan coated body color RAL 5024 , 250-300 microns thickness

USE :

- Fluids : Gas
- Min and max Temperature Ts : - 20°C to + 60°C
- Max Pressure Ps : 5 bars (MOP 5 class)

RANGE :

- With lever from DN 40 to DN 200

CONNECTION :

- Between PN10/16 flanges up to DN150 and PN10 for DN200

TORQUE VALUES (in Nm with safety coefficient of 30 % included) at 10 Bars :

DN	40	50	65	80	100	125	150	200
Torque (Nm)	8	10	14	18	31	59	93	206

MAXIMUM TIGHTENING TORQUES FOR BOLTING FLANGES :

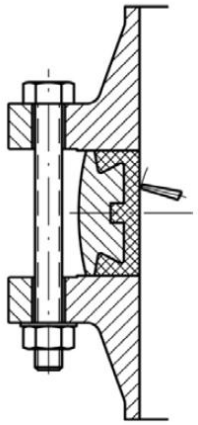

		Maximum torques (Nm)			
	Bolting types	5,6 / A307 Gr.B	8,8 / A193 B7	10,9	12,9
Bolting DN	M12 (1/2'')	41,16	84,28	117,6	142,1
	M14 (9/16'')	66,64	132,3	186,2	225,4
	M16 (5/8'')	102,9	205,8	289,1	347,9
	M18 (3/4'')	142,1	284,2	396,9	475,3
	M20 (3/4'')	196	401,8	568,4	676,2

CONCENTRIC GAS LUG BUTTERFLY VALVE EXCELLENCE RANGE TTV
DUCTILE IRON BODY-STAINLESS STEEL/DUCITLE IRON DISC AND NBR SEAT

FLOW COEFFICIENT Kv (m3 / h) :

DN	Opening Angle								
	10°	20°	30°	40°	50°	60°	70°	80°	90°
40	3	4	8	17	25	35	45	56	70
50	3	6	14	22	37	60	95	147	164
65	4	7	10	22	48	78	140	160	201
80	5	12	29	52	88	156	216	281	359
100	9	21	48	87	147	234	346	519	627
125	19	35	78	148	232	372	562	761	995
150	28	48	108	203	324	536	865	1211	1471
200	35	91	206	320	554	952	1427	2163	2509

HEAD LOSS CALCULATIONS :

Δp = (Q / Kv)² x SG

Q : flow in m³/h

Δp : Head loss in bar

SG : Specific gravity (= 1 for water)

Kv : Volume of water in m³/h, that will flow through a given restriction or valve opening with a pressure drop of 1 bar at 20ºC)

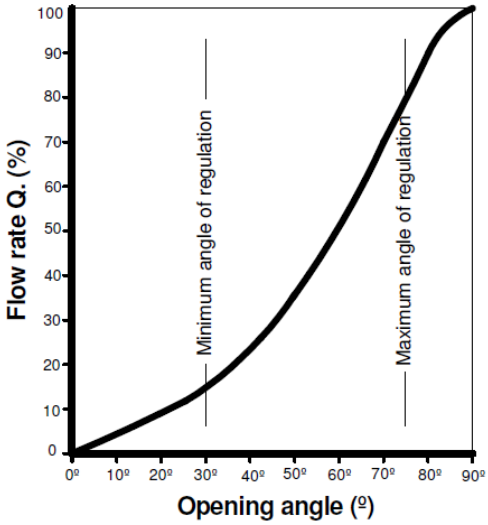

CONCENTRIC GAS LUG BUTTERFLY VALVE EXCELLENCE RANGE TTV
DUCTILE IRON BODY-STAINLESS STEEL/DUCITLE IRON DISC AND NBR SEAT

MATERIALS :

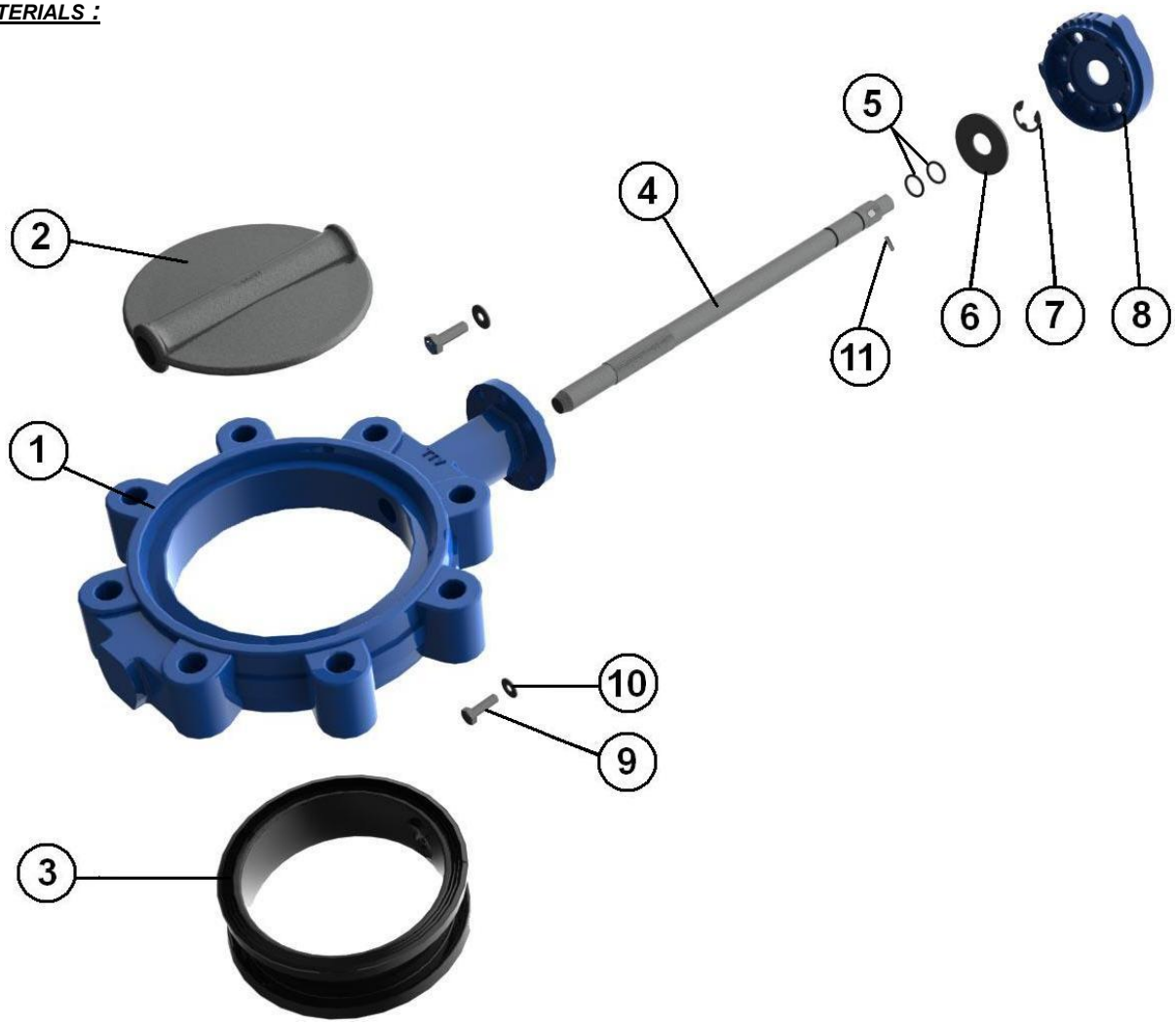

Item	Designation	Materials
1	Body	Ductile iron EN GJS-500-7 rilsan coated color RAL 5024 , 250-300 µ thickness
2	Disc DN40-100	ASTM A351 CF8M
2	Disc DN125-200	Chromed Ductile iron EN GJS 500-7
3	Seat	NBR for Gas
4	Stem	AISI 420
5	O ring	NBR
6	Ring	Steel
7	Circlips	Steel
8	Plate	Aluminium
9	Plate screw	5.6
10	Washer	Steel
11	Pin	
	Lever	Aluminium ADC10 with epoxy painting 50µ thickness

CONCENTRIC GAS LUG BUTTERFLY VALVE EXCELLENCE RANGE TTV
DUCTILE IRON BODY-STAINLESS STEEL/DUCITLE IRON DISC AND NBR SEAT

SIZE DN40-150 (in mm) :

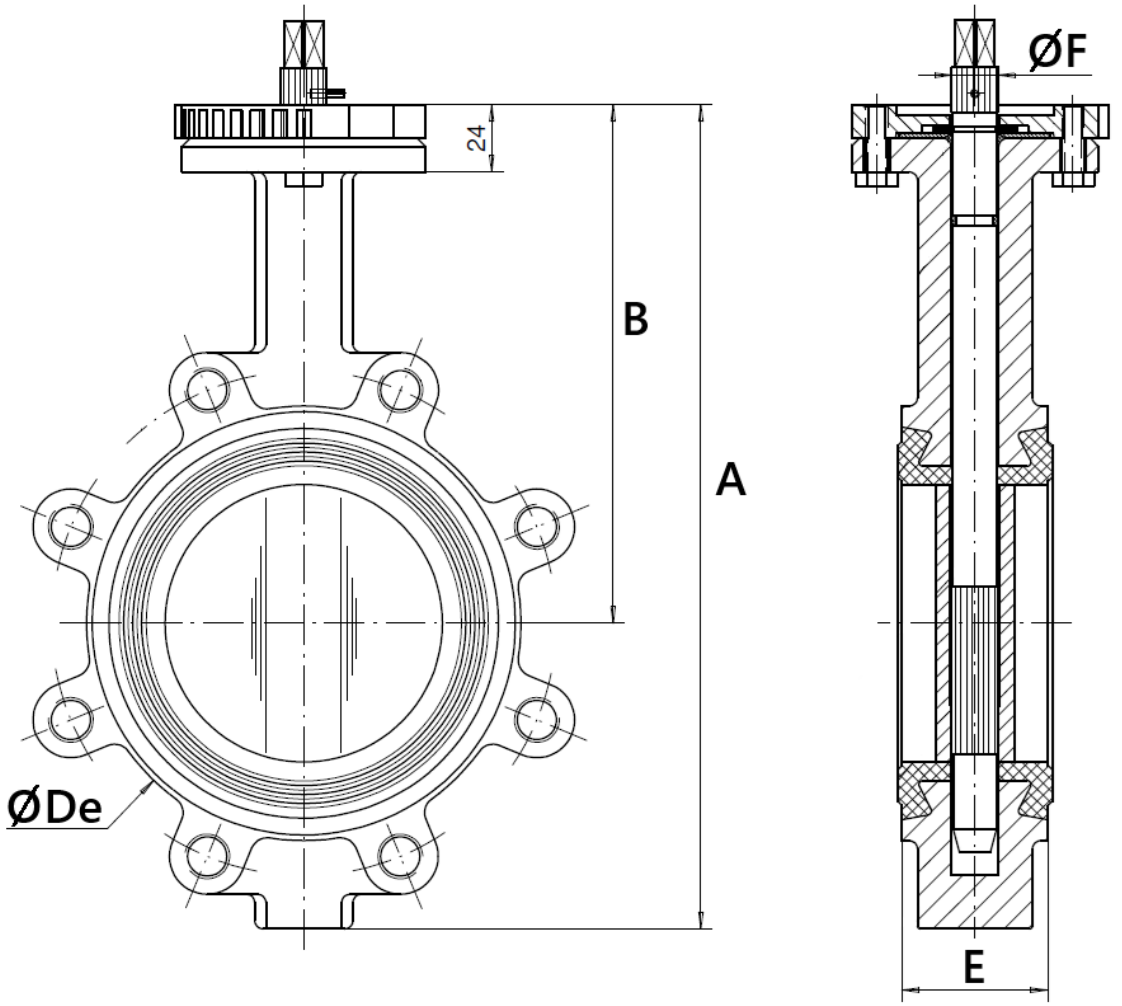

DN	40	50	65	80	100	125	150
A	204	226	241	256	295	326	355
B	139	156	160	168	184	205	214
Ø De	83	103	115	137	156	186	221
E	33	43	46	46	52	56	56
Ø F	10.5	10.5	14.5	16.5	16.5	18.5	18.5
Weight (Kg)	2.7	4.1	4.7	6.1	7.9	10.9	11.85

Information provided as an indication and subject to possible modification

CONCENTRIC GAS LUG BUTTERFLY VALVE EXCELLENCE RANGE TTV
DUCTILE IRON BODY-STAINLESS STEEL/DUCITLE IRON DISC AND NBR SEAT

SIZE DN200 (in mm) :

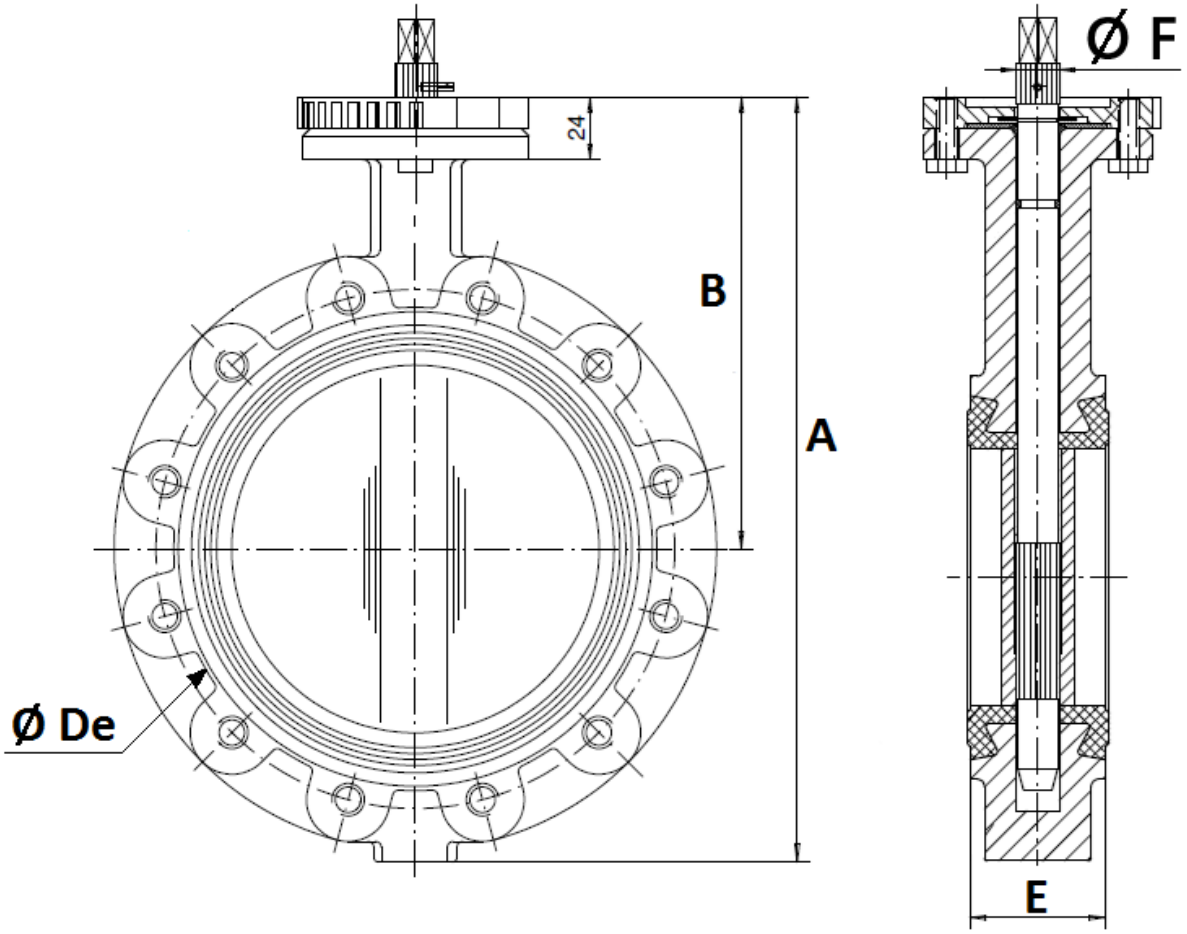

DN	200
A	439
B	255
Ø De	275
E	60
Ø F	22.5
Weight (Kg)	18.5

Information provided as an indication and subject to possible modification

CONCENTRIC GAS LUG BUTTERFLY VALVE EXCELLENCE RANGE TTV
DUCTILE IRON BODY-STAINLESS STEEL/DUCITLE IRON DISC AND NBR SEAT

LEVERS SIZE (in mm) :

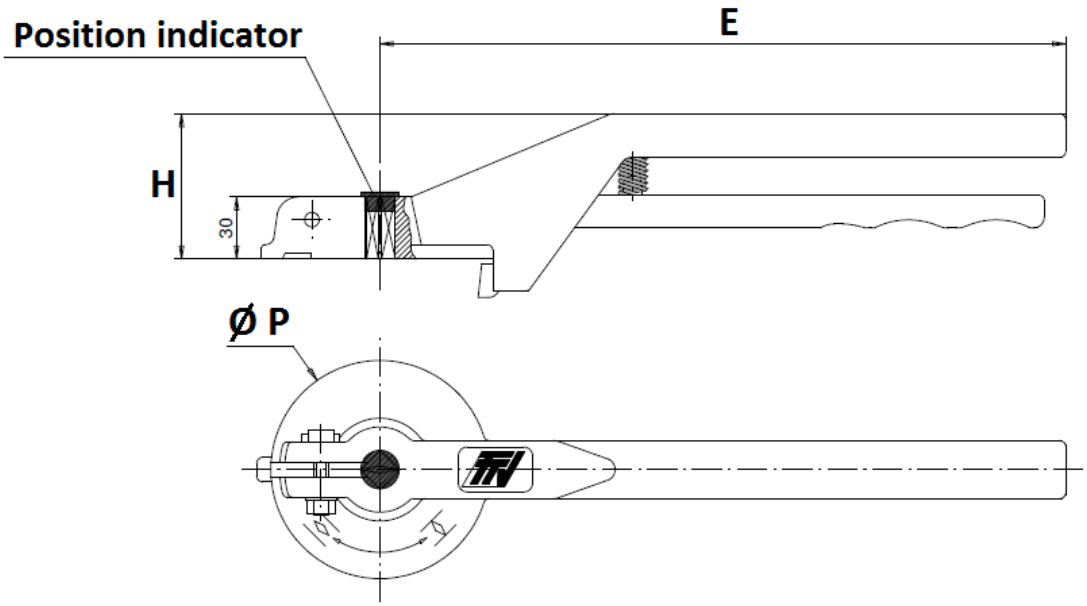

DN	40-100	125-200
E	205	330
H	57	70
Ø P	88	105

CONCENTRIC GAS LUG BUTTERFLY VALVE EXCELLENCE RANGE TTV
DUCTILE IRON BODY-STAINLESS STEEL/DUCITLE IRON DISC AND NBR SEAT

ISO MOUNTING PAD AND STEM SIZE (in mm) :

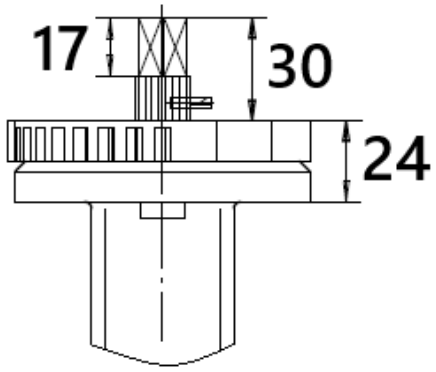

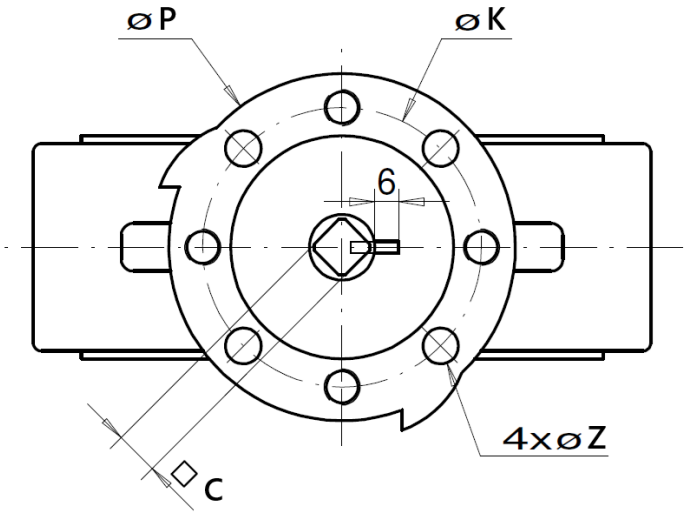

DN	40	50	65	80	100	125	150	200
C	8		9	11		14		17
Ø K	70							
ISO	F07							
4 x Ø Z	4 x 9							
Ø P	88					105		

Information provided as an indication and subject to possible modification

CONCENTRIC GAS LUG BUTTERFLY VALVE EXCELLENCE RANGE TTV
DUCTILE IRON BODY-STAINLESS STEEL/DUCITLE IRON DISC AND NBR SEAT

BETWEEN FLANGES SIZE :

DN 40-150

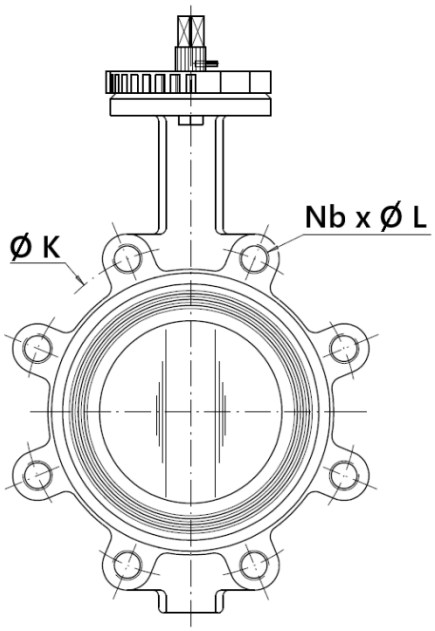

DN200

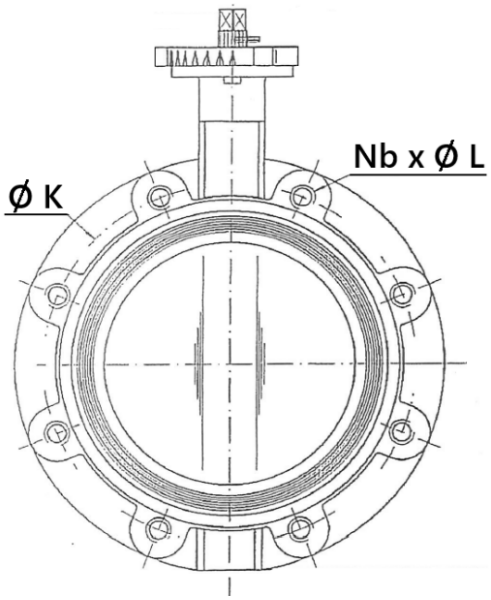

	DN (mm)	40	50	65	80	100	125	150	200
	NPS (")	1"1/2	2"	2"1/2	3"	4"	5"	6"	8"
PN10	Ø K	110	125	145	160	180	210	240	295
	Nb x Ø L	4 x M16			8 x M16			8 x M20	
PN16	Ø K	110	125	145	160	180	210	240	295
	Nb x Ø L	4 x M16			8 x M16			8xM20	12xM20

Information provided as an indication and subject to possible modification

CONCENTRIC GAS LUG BUTTERFLY VALVE EXCELLENCE RANGE TTV
DUCTILE IRON BODY-STAINLESS STEEL/DUCITLE IRON DISC AND NBR SEAT

DEPTH THREADED HOLES:

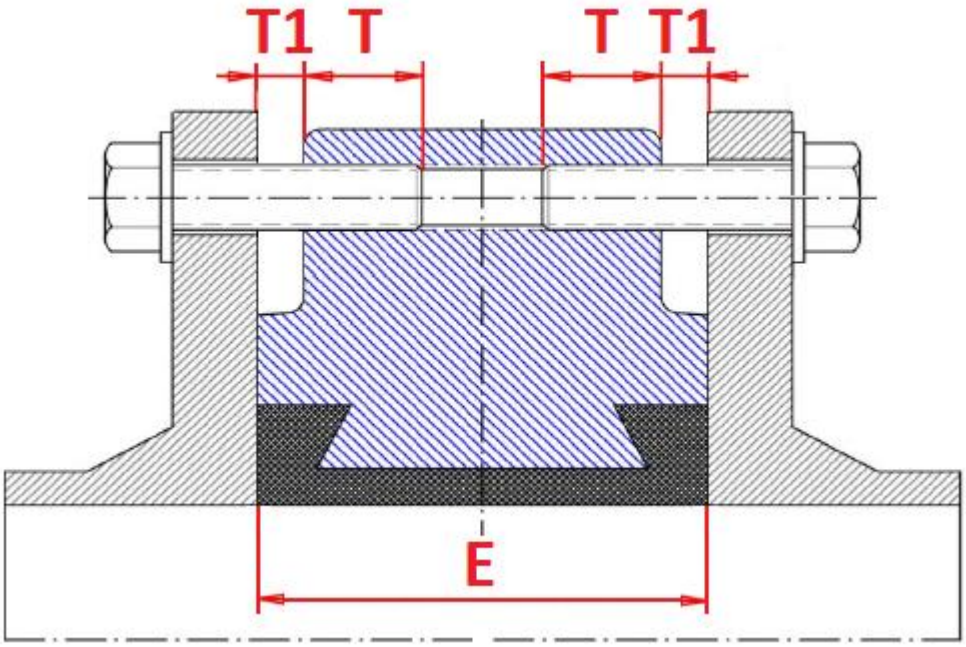

DN	PN10	PN16	PN10 - PN16	
	T	T	T1	E
32	13.5	13.5	2.5	33
40	13.5	13.5	2.5	33
50	14.5	14.5	2.5	43
65	13.5	13.5	3.5	46
80	16	16	4	46
100	17.5	17.5	2.5	52
125	20	20	3	56
150	20	20	3	56
200	23	23	3	60

Information provided as an indication and subject to possible modification

CONCENTRIC GAS LUG BUTTERFLY VALVE EXCELLENCE RANGE TTV
DUCTILE IRON BODY-STAINLESS STEEL/DUCITLE IRON DISC AND NBR SEAT

NECK AND DISC SIZE (in mm) :

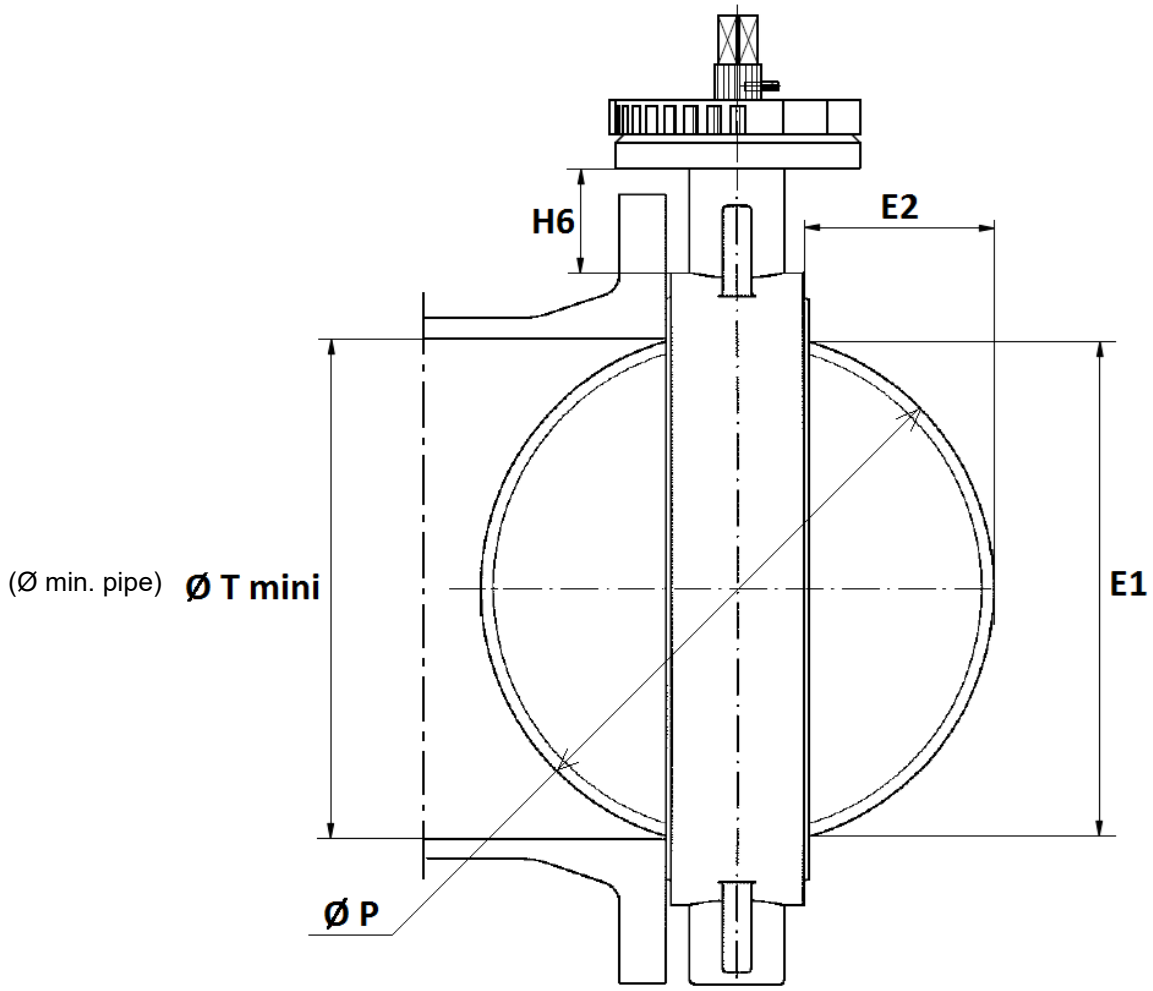

DN	40	50	65	80	100	125	150	200
E1	23	24.5	46	65	85	109	136	188
E2	3.5	3.5	9.5	17	24	33.5	45.5	69
H6	76	82	80	80	88	93	89	99
Ø T mini	26	27.5	49	68	88	112	139	191
Ø P	40	50	65	80	100	123	147	198

Information provided as an indication and subject to possible modification

CONCENTRIC GAS LUG BUTTERFLY VALVE EXCELLENCE RANGE TTV DUCTILE IRON BODY-STAINLESS STEEL/DUCITLE IRON DISC AND NBR SEAT

STANDARDS :

- Manufacturer certified ISO 9001 : 2015
- DIRECTIVE 2014/68/EU : For liquids or Gas of Group 1
  - DN32-100 : Risk category I, CE marking
  - DN125-200 : Risk category II, CE0094 marking
- Certificate 3.1 on request
- Pressure tests according to EN 12266-1, rate A
- Between PN10/16 flanges according to EN 1092-1
- ISO 5211 mounting pad
- Length according to :
  - ISO 5752 short series 20
  - EN 558 series 20 (NF 29305)
  - BS 5155 series 4
  - DIN 3202 part 3, series K1
  - API 609 Table 1 up to DN600
  - ASME B16.10 Table 8 column 3
- ATEX Group II Category 2 G/2D Zone 1 & 21 Zone 2 & 22 (on request)
- **Certificate NF ROBGAZ N° ROB 064 according to NF EN 13774 & NF EN 549**

INSTALLATION INSTRUCTIONS :

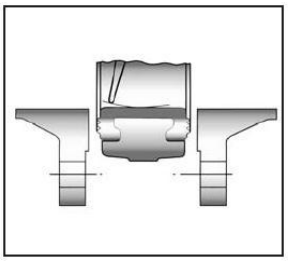

Half open valve introduction

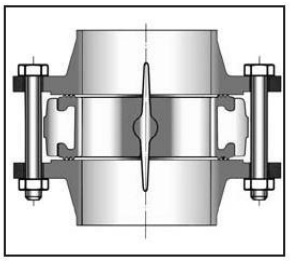

Complete opened disc valves when screw tightening

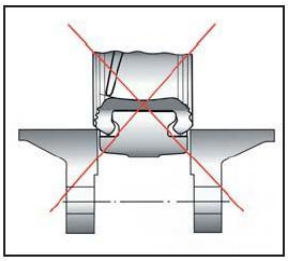

ADVICE : Our opinion and our advice are not guaranteed and SFERACO shall not be liable for the consequences of damages.
The customer must check the right choice of the products with the real service conditions.

Sferaco 90 rue du Ruisseau 38297 St Quentin Fallavier Tel: + 33 (0) 474.94.15.90 Fax: + 33 (0) 474.95.62.08 Internet: www.sferaco.com E-mail : info@sferaco.fr

Information provided as an indication and subject to possible modification