TTV WAFER BUTTERFLY VALVE FOR FIRE NETWORK –SPRINKLER EXCELLENCE RANGE

Wafer butterfly valves TTV excellence range for closing or setting fire networks and sprinkler with lockable gearbox and sensors.
10 years warranty.
Ductile iron body EN GJS-500-7, stainless steel disc up to DN100 and EPDM seat.
Between flanges PN10, PN16 or Class 150 according to the DN.

CNPP

Certificate 3.1

CE

Lloyd's Register
PED/2014/68/UE

WARRANTY 10 years MANUFACTURE *



TTV

Size :	DN50 to DN300
Connection :	Between flanges PN10/16 and Class 150 (PN20)
Min Temperature :	-10°C
Max Temperature :	+110°C
Max Pressure :	16 Bars
Specifications :	Long neck for isolation Wafer type Full crossing stem Gear box with position indicator
Materials :	Ductile iron GJS 500-7 body, EPDM seat

*the installation defects and wear defects are not covered by the guarantee

Information provided as an indication and subject to possible modification

TTV WAFER BUTTERFLY VALVE FOR FIRE NETWORK –SPRINKLER EXCELLENCE RANGE

SPECIFICATIONS :

- CNPP
- Long neck for isolation
- For fire network
- IP65 gearbox
- Gear box with position indicator
- Aluminium gear box with locking device
- Valve indicator (indicate valve position : opened or closed)
- Wafer type
- Between flanges PN10/16 and Class 150 (PN20)
- Full crossing stem
- Stainless steel disc up to DN100 included
- Chromed ductile iron disc from DN125 to DN300
- Rilsan coated body color RAL 5024 250-300 microns thickness

USE :

- For fire network and sprinkler
- Min and max Temperature Ts : - 10°C to + 110°C
- Max Pressure Ps : 16 bars (see graph page 5)

RANGE :

- Wafer butterfly valve with gear box **Ref. 1142** DN 50 to DN 300

CONNECTION :

- Between flanges PN10-PN16 and Class 150 (PN20)

TORQUE VALUE (in Nm with safety coefficient of 30 % included) :

		DN									
	Pressure (Bar)	**32/40**	**50**	**65**	**80**	**100**	**125**	**150**	**200**	**250**	**300**
Torque (Nm) with machined disc (on request)	1-5*	2	4	6	8	10	14	15	25	64	118
	6*	3	5	7	10	12	18	31	55	123	216
	10*	6	8	10	14	18	31	59	93	206	330
Torque (Nm)	**16**	**9**	**11**	**20**	**29**	**47**	**82**	**130**	**210**	**360**	**475**

* : Torques with machined disc (on request)

Information provided as an indication and subject to possible modification

TTV WAFER BUTTERFLY VALVE FOR FIRE NETWORK –SPRINKLER EXCELLENCE RANGE

MAXIMUM TIGHTENING TORQUES FOR BOLTING FLANGES :

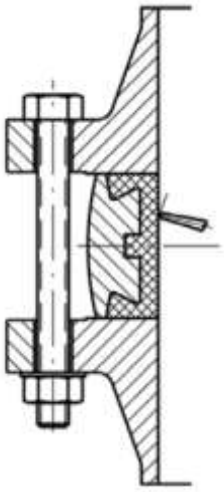

		Maximum torques (Nm)			
	Bolting types	5,6 / A307 Gr.B	8,8 / A193 B7	10,9	12,9
Bolting DN	M12 (1/2'')	41,16	84,28	117,6	142,1
	M14 (9/16'')	66,64	132,3	186,2	225,4
	M16 (5/8'')	102,9	205,8	289,1	347,9
	M18 (3/4'')	142,1	284,2	396,9	475,3
	M20 (3/4'')	196	401,8	568,4	676,2
	M22 (7/8'')	259,7	539	764,4	911,4
	M24 (1'')	338,1	695,8	980	1176
	M27 (1''1/8)	499,8	1029	1470	1764
	M30 (1''1/4)	666,4	1421	1960	2352

Information provided as an indication and subject to possible modification

TTV WAFER BUTTERFLY VALVE FOR FIRE NETWORK –SPRINKLER EXCELLENCE RANGE

FLOW COEFFICIENT Kv (m3 / h) :

DN	Opening angle								
	10°	20°	30°	40°	50°	60°	70°	80°	90°
50	3	6	14	22	37	60	95	147	164
65	4	7	10	22	48	78	140	160	201
80	5	12	29	52	88	156	216	281	359
100	9	21	48	87	147	234	346	519	627
125	19	35	78	148	232	372	562	761	995
150	28	48	108	203	324	536	865	1211	1471
200	35	91	206	320	554	952	1427	2163	2509
250	43	143	329	562	865	1471	2336	3460	3936
300	69	216	476	770	1341	2206	3460	4758	5865

HEAD LOSS CALCULATIONS :

Δp = (Q / Kv)² x SG

Q : flow in m³/h

Δp : Head loss in bar

SG : Specific gravity (= 1 for water)

Kv : Volume of water in m³/h, that will flow through a given restriction or valve opening with a pressure drop of 1 bar at 20°C)

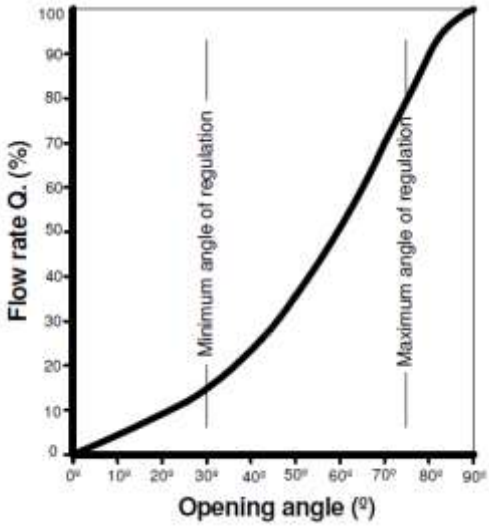

Information provided as an indication and subject to possible modification

TTV WAFER BUTTERFLY VALVE FOR FIRE NETWORK –SPRINKLER EXCELLENCE RANGE

PRESSURE / TEMPERATURE GRAPH (STEAM EXCLUDED) :

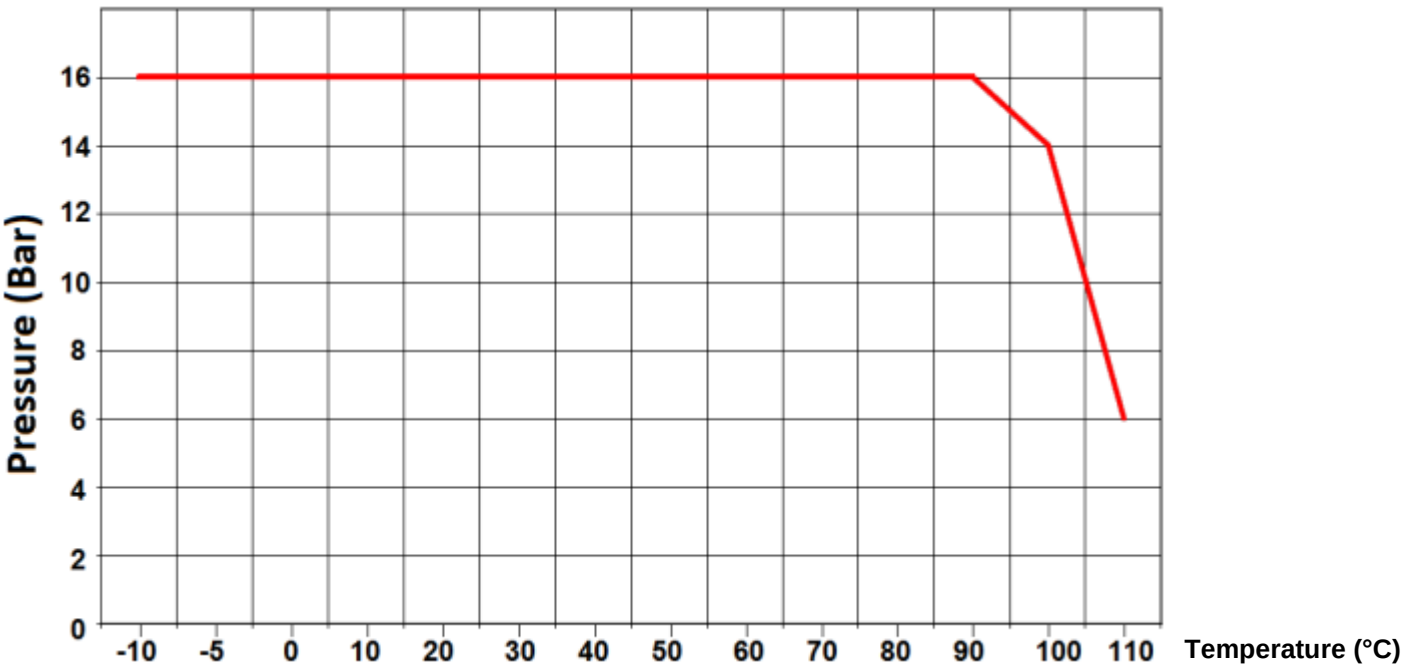

Information provided as an indication and subject to possible modification

TTV WAFER BUTTERFLY VALVE FOR FIRE NETWORK –SPRINKLER EXCELLENCE RANGE

MATERIALS DN 50 - 200 :

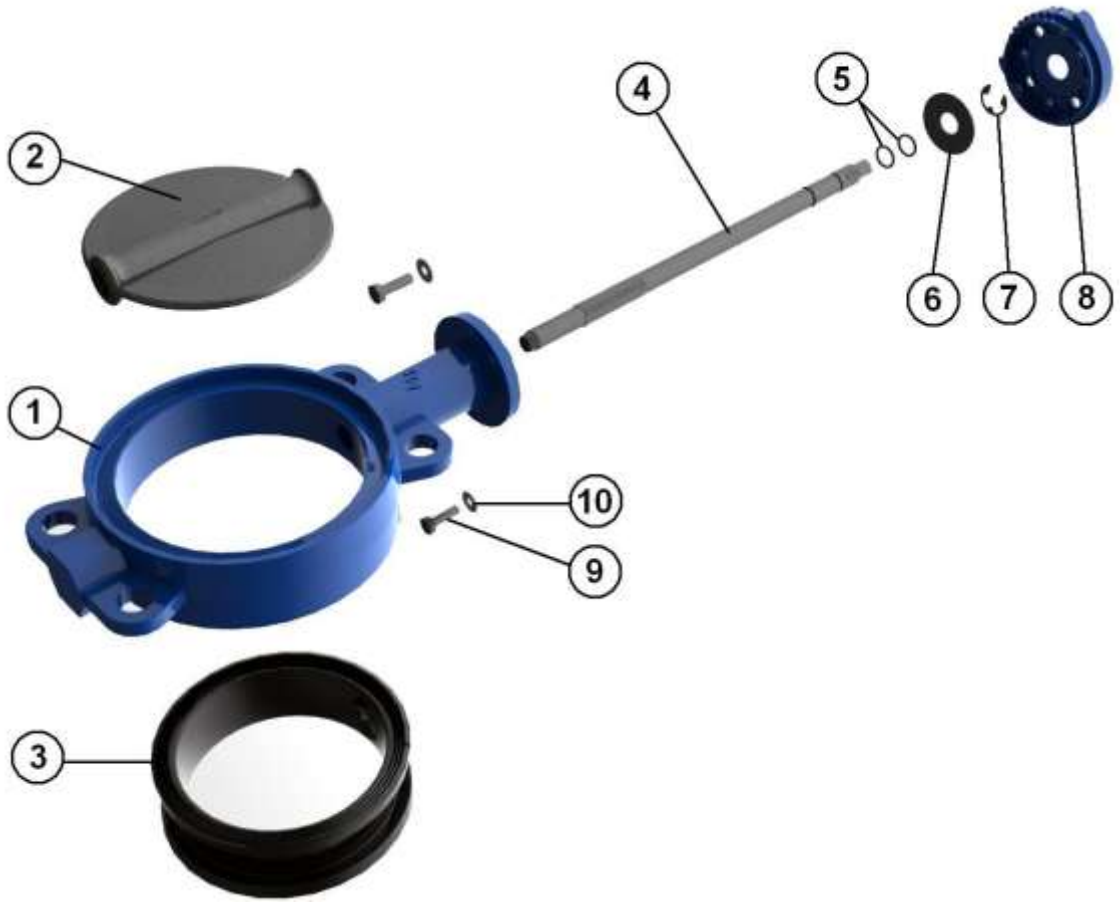

Item	Designation	Materials
1	Body	Ductile iron EN GJS-500-7 rilsan coated color RAL 5024 250-300 µ thickness
2	Disc DN 50 -100	ASTM A351 CF8M
2	Disc DN125 - 200	Chromed EN GJS-500-7
3	Seat	EPDM
4	Stem	AISI 420
5	O ring	NBR
6	Ring	Steel
7	Circlips	
8	Plate	Aluminium
9	Plate screw	5.6
10	Washer	Steel

Information provided as an indication and subject to possible modification

TTV WAFER BUTTERFLY VALVE FOR FIRE NETWORK –SPRINKLER EXCELLENCE RANGE

MATERIALS DN 250 - 300 :

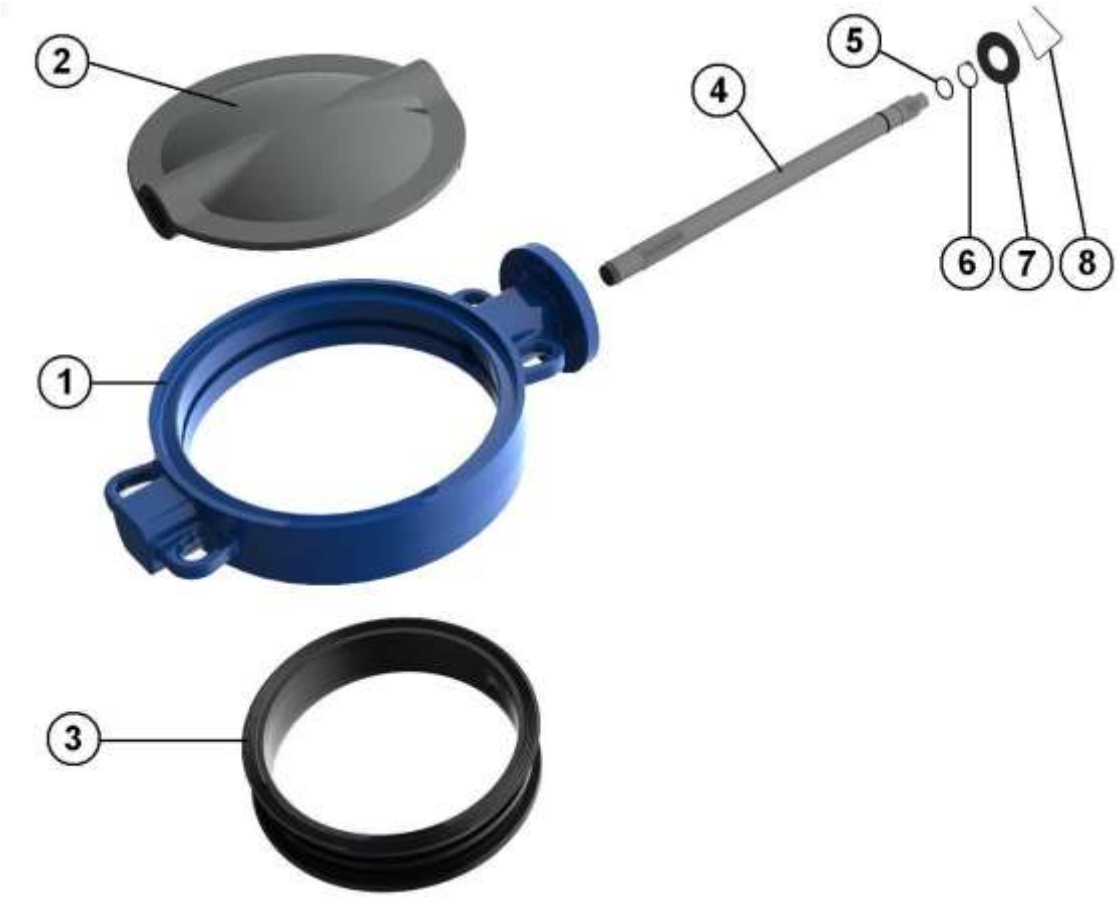

Item	Designation	Materials
1	Body	Ductile iron EN GJS-500-7 rilsan coated color RAL 5024 250-300 µ thickness
2	Disc	Chromed EN GJS-500-7
3	Seat	EPDM
4	Stem	AISI 420
5	O ring	NBR
6	Circlips	Steel
7	Ring	
8	Spring	

Information provided as an indication and subject to possible modification

TTV WAFER BUTTERFLY VALVE FOR FIRE NETWORK –SPRINKLER EXCELLENCE RANGE

SIZE DN50-200 (in mm) :

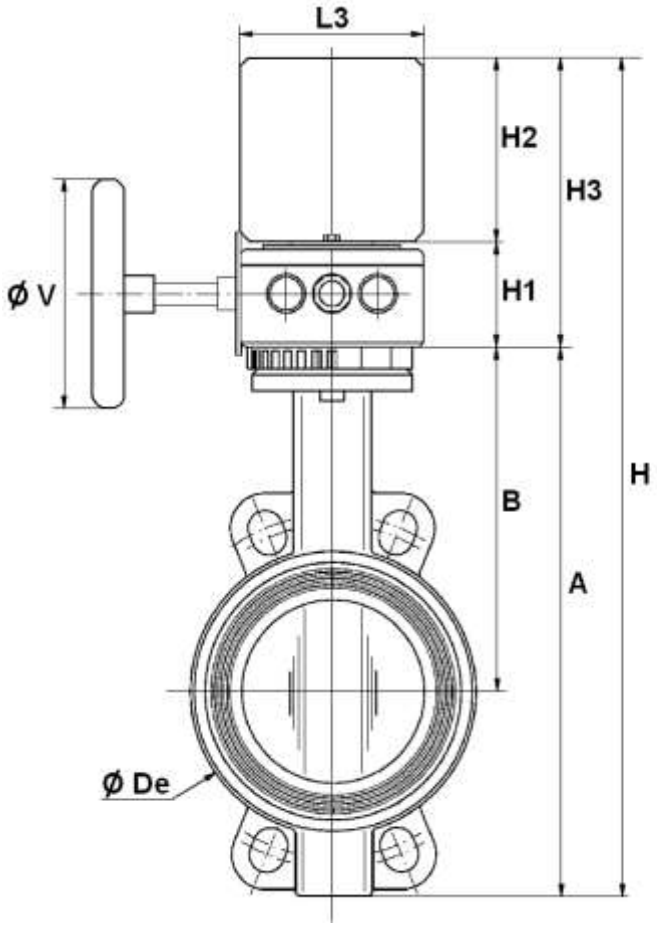

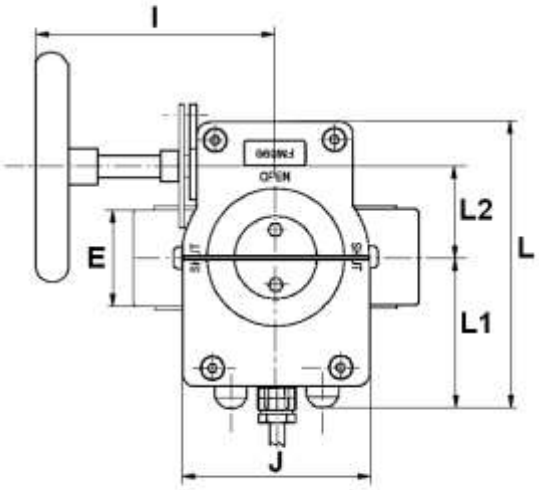

Locking device :

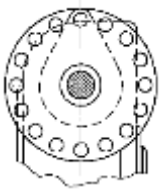

DN	50	65	80	100	125	150	200
E	43	46	46	52	56	56	60
A	228	248	265	298	326	349	430
B	156	161	169	187	206	215	255
H	385.5	405.5	422.5	455.5	483.5	506.5	587.5
H1	57.5	57.5	57.5	57.5	57.5	57.5	57.5
H2	100	100	100	100	100	100	100
H3	157.5	157.5	157.5	157.5	157.5	157.5	157.5
L3	100	100	100	100	100	100	100
Ø V	100	100	125	125	125	125	200
I	132	132	131	131	131	131	143
J	102	102	102	102	102	102	102
L	156	156	156	156	156	156	156
L1	82	82	82	82	82	82	82
L2	50	50	50	50	50	50	50
Ø De	102	119	135	155	185	208	270
Weight (Kg)	5.6	6.25	6.75	8	9.5	10.5	15.65
Ref.	1142050	1142065	1142080	1142100	1142125	1142150	1142200

Information provided as an indication and subject to possible modification

TTV WAFER BUTTERFLY VALVE FOR FIRE NETWORK –SPRINKLER EXCELLENCE RANGE

SIZE DN250-300 (in mm) :

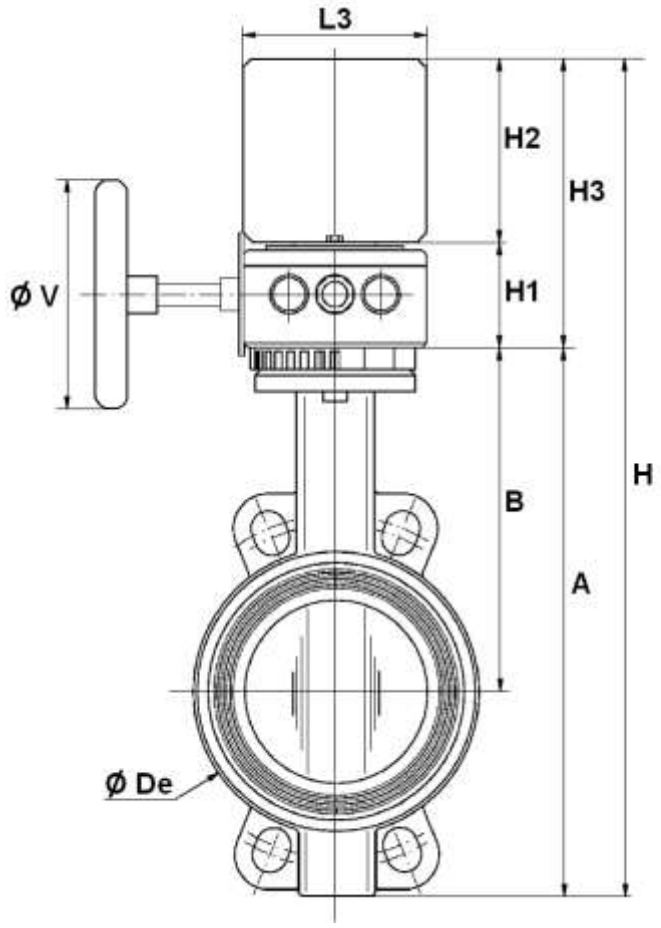

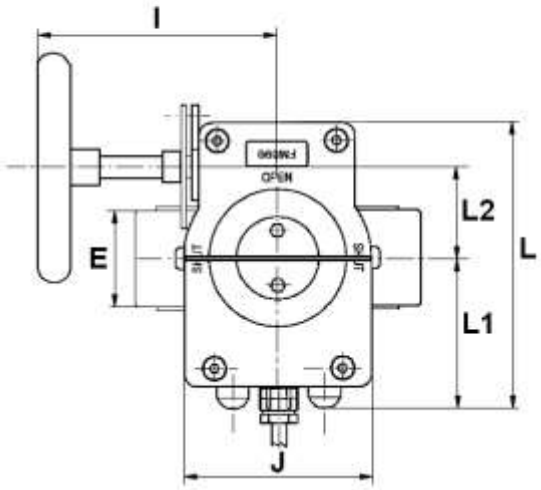

Modification in progress for locking device :

NEW

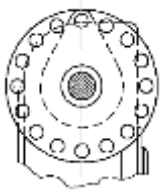

ACTUAL

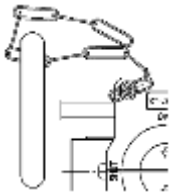

DN	250	250 New	300	300 New
E	68		78	
A	461		523	
B	248		280	
H	633.5		696.5	
H1	72.5			
H2	100			
H3	172.5			
L3	100			
Ø V	250	300	250	300
I	210	223.5	210	223.5
J	146	140	146	140
L	177.5	182	177.5	182
L1	82.5	82	82.5	82
L2	60	61.25	60	61.25
Ø De	328		381	381
Weight (in Kg)	25.8	27	34.3	35.5
Ref.	1142250		1142300	

Information provided as an indication and subject to possible modification

TTV WAFER BUTTERFLY VALVE FOR FIRE NETWORK –SPRINKLER EXCELLENCE RANGE

BETWEEN FLANGES SIZE (in mm) :

DN 50 - 200

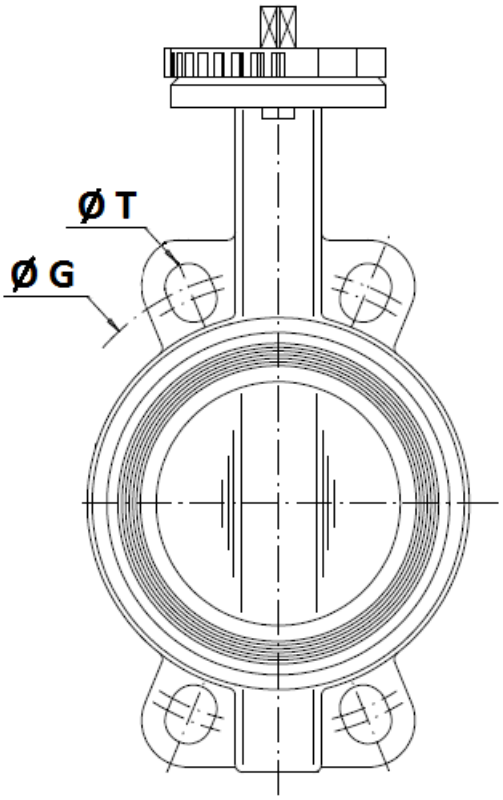

DN250 – 300

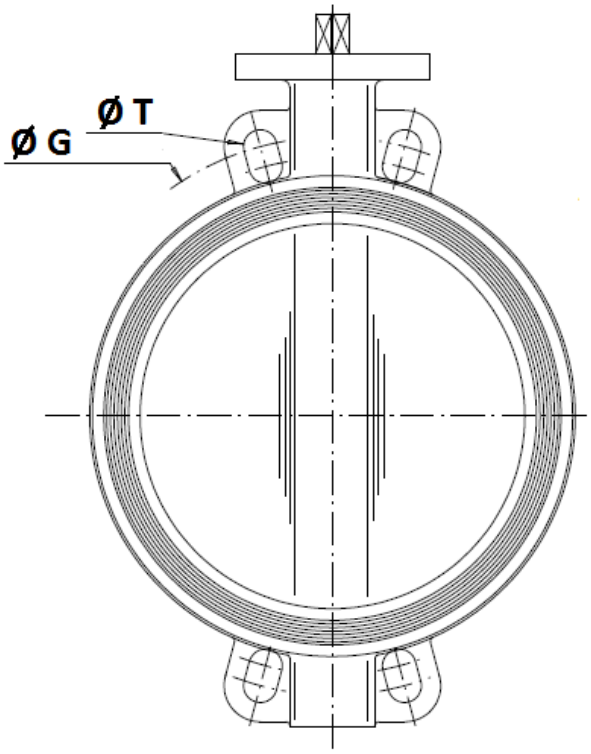

	DN (mm)	50	65	80	100	125	150	200	250	300
	NPS (")	2"	2"1/2	3"	4"	5"	6"	8"	10"	12"
PN10	Ø G	125	145	160	180	210	240	295	350	400
	Ø T	18	18	18	18	18	23	23	23	23
PN16	Ø G	125	145	160	180	210	240	295	355	410
	Ø T	18	18	18	18	18	23	23	27	27
Class 150	Ø G	120.6	139.7	152.4	190.5	215.9	241.3	298.5	362	431.8
	Ø T	19	19	19	19	23	23	23	26	26

Information provided as an indication and subject to possible modification

TTV WAFER BUTTERFLY VALVE FOR FIRE NETWORK –SPRINKLER EXCELLENCE RANGE

DISC AND NECK SIZE (in mm) :

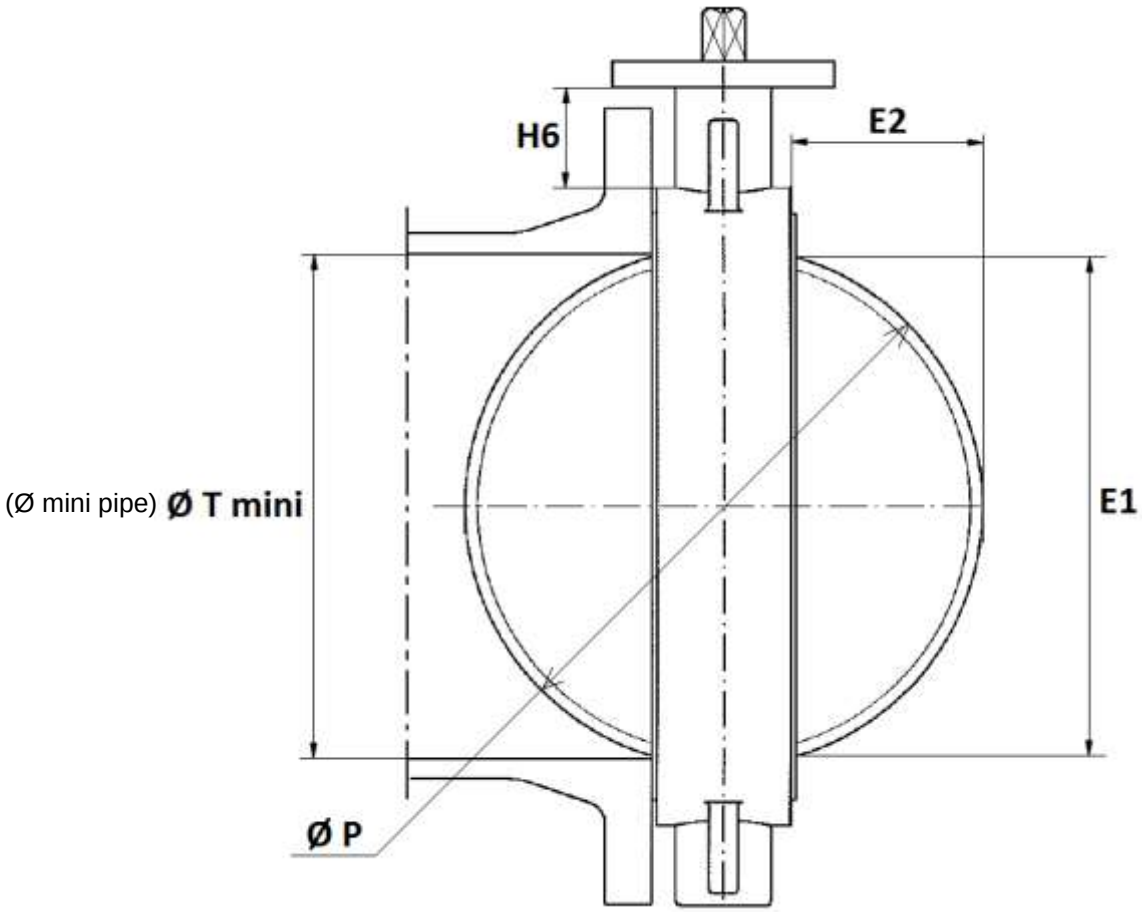

DN	50	65	80	100	125	150	200	250	300
E1	24.5	46	65	85	109	136	188	238	289
E2	3.5	9.5	17	24	33.5	45.5	69	90	110.5
H6	82	80	80	88	93	89	99	71	76
Ø T mini	27.5	49	68	88	112	139	191	241	292
Ø P	50	65	80	100	123	147	198	248	299

Information provided as an indication and subject to possible modification

TTV WAFER BUTTERFLY VALVE FOR FIRE NETWORK –SPRINKLER EXCELLENCE RANGE

POSITION INDICATOR :

- A double contact (incompleted opening position) , signal at the begining of closure.
- 7 wires cable 0.75 mm2 1 meter long

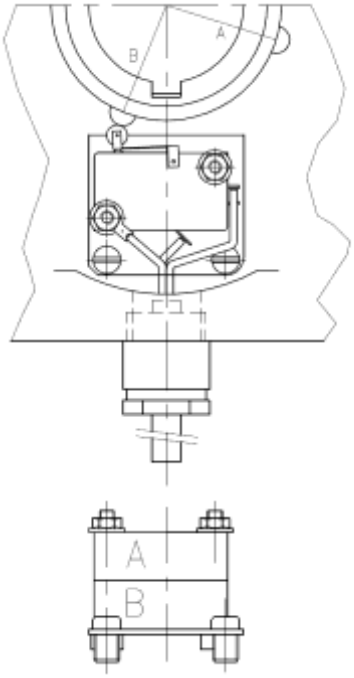

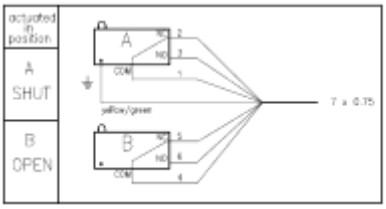

Information provided as an indication and subject to possible modification

TTV WAFER BUTTERFLY VALVE FOR FIRE NETWORK –SPRINKLER EXCELLENCE RANGE

STANDARDS :

- Manufacturer certified ISO 9001 : 2015
- DIRECTIVE 2014/68/EU : For liquids of Group 1
  - DN32-125 : Article 4, §3 (SEP), no CE marking
  - DN150-300 : Risk category II, CE0094 marking
- Certificate 3.1 on request
- Designing according to NF EN 593 v 2004
- Marking according to NFE 29-130
- Tests according to EN 12266-1, Rate A
- Between flanges according to EN 1092-1 PN10/16
- ISO 5211 mounting pad
- Length according to :
  - ISO 5752 short series 20
  - EN 558 series 20 (NF 29305)
  - BS 5155 series 4
  - DIN 3202 part 3, series K1
  - API 609 Table 1 up to DN600
  - ASME B16.10 Table 8 column 3
- Belongs to the list of materials that can be used as part of an installation according to the rule **APSAD R1**

INSTALLATION :

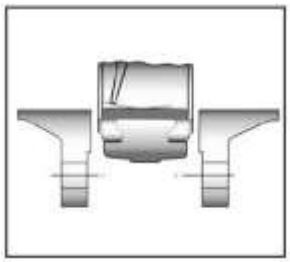

Half open valve introduction

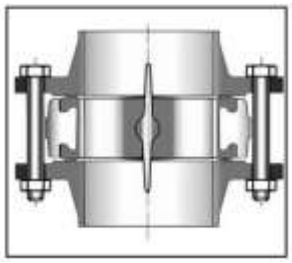

Complete opened disc valves when screw tightening

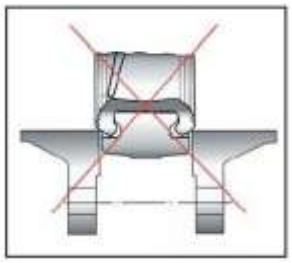



Do not install with head down

ADVICE : Our opinion and our advice are not guaranteed and SFERACO shall not be liable for the consequences of damages.
The customer must check the right choice of the products with the real service conditions.

Information provided as an indication and subject to possible modification

TUBOTEK | Article references

1142 | Article mapping

Appendix 1

Tubotek SKU	Sferaco / Sectoriel	Grouping ID	DN / PN
VTWIFM-050	1142050	VTWIFM-1142-XXX	DN50
VTWIFM-065	1142065	VTWIFM-1142-XXX	DN65
VTWIFM-080	1142080	VTWIFM-1142-XXX	DN80
VTWIFM-100	1142100	VTWIFM-1142-XXX	DN100
VTWGFM-125	1142125	VTWIFM-1142-XXX	DN125
VTWGFM-150	1142150	VTWIFM-1142-XXX	DN150
VTWGFM-200	1142200	VTWIFM-1142-XXX	DN200
VTWGFM-250	1142250	VTWIFM-1142-XXX	DN250
VTWGFM-300	1142300	VTWIFM-1142-XXX	DN300

Source: Tubotek import - test kopie syveco - C / D / H.
Technical data and certifications: original manufacturer documentation.
SKU and grouping identifiers reproduced from the import file.