PTFE WAFER CONCENTRIC BUTTERFLY VALVE EXCELLENCE RANGE TTV
DUCTILE IRON BODY-CF8M DISC AND PTFE SEAT

Wafer butterfly valve TTV excellence range for corrosives fluids (acids…).
PTFE seat in accordance with the regulation (EC) N° 1935/2004., 10 years warranty.
Ductile iron EN GJS-500-7 body, stainless steel disc and PTFE seat.
Between flanges PN10/16 or class 150 according to DN.
Compatible with explosive atmosphere, ATEX Zone 1&21 and Zone 2&22 on request.
Handling possible with stainless steel handle, gearbox or, chain gearbox and stem extension.
Thanks to the ISO 5211 plate and the square stem, an actuator can be installed direct on the valve.

FDA CE 1935/2004 — Certificate 3.1 — Lloyd's Register PED/2014/68/UE — Warranty 10 years Manufacture*

SIL3 IEC 61508 / IEC 61511



Size :	DN32/40 to DN300
Connection :	Between flanges PN10/16 and Class 150 (PN20)
Min Temperature :	-29°C
Max Temperature :	+220°C
Max Pressure :	16 Bars up to DN150
Specifications :	Long neck for isolation 2 parts body ISO 5211 direct mounting pad
Materials :	Ductile iron GJS 500-7 body, PTFE seat

*the installation defects and wear defects are not covered by the guarantee

Information provided as an indication and subject to possible modification

PTFE WAFER CONCENTRIC BUTTERFLY VALVE EXCELLENCE RANGE TTV
DUCTILE IRON BODY-CF8M DISC AND PTFE SEAT

SPECIFICATIONS :

- Long neck for isolation
- ISO 5211 mounting pad
- Wafer type
- Between flanges PN10/16 from DN32/40 to 300 and Class 150 (PN20) from DN40 to 300
- 2 parts body
- Full crossing stem
- PTFE sealing ring 3 mm thickness with silicone elastic gasket 6 mm thickness
- Stainless steel disc
- 9 positions lever with locking device up to DN150
- Rilsan coated body color RAL 5024 , 250-300 microns thickness
- Stem extension 75 mm length (option)
- Square lever 30x30 mm for special key (option)

USE :

- For corrosive fluids (acids …)
- Min and max Temperature Ts : - 29°C to + 220°C
- Max Pressure Ps : 16 bars up to DN150, 10 bars over (see graph under)
- Not for vacuum

RANGE :

- With lever from DN 32/40 to DN 150
- With IP65 gear box from DN 200 to DN 300 (possible from DN 32/40 to DN150 : **Ref. 1197**)
- On request , IP65 chain gear box (**Ref. 1194**) from DN 32/40 to DN 300
- On request , stem extension with special length (**Ref. 98665**)
- On request, stainless steel lever and bolting (**Ref. 9831250-9831264**)

PRESSURE / TEMPERATURE GRAPH (STEAM EXCLUDED) :

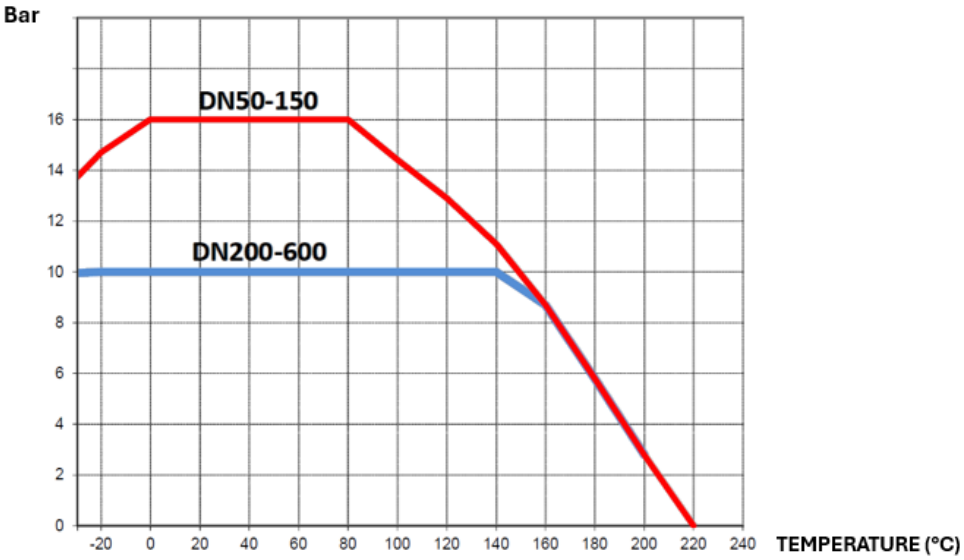

CONNECTION :

- Between flanges PN10/16 from DN32/40 to 300 and Class 150 (PN20) from DN40 to 300

Information provided as an indication and subject to possible modification

PTFE WAFER CONCENTRIC BUTTERFLY VALVE EXCELLENCE RANGE TTV
DUCTILE IRON BODY-CF8M DISC AND PTFE SEAT

TORQUE VALUES (in Nm with safety coefficient of 30 % included) at 10 Bars :

DN	32/40	50	65	80	100	125	150	200	250	300
Torque (Nm)	25	40	45	75	90	160	180	230	475	680

MAXIMUM TIGHTENING TORQUES FOR BOLTING FLANGES :

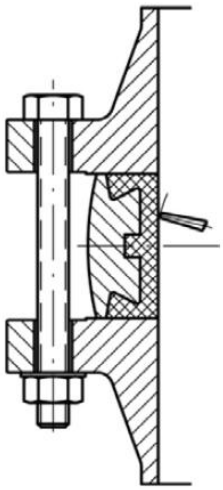

		Maximum torques (Nm)			
	Bolting types	5,6 / A307 Gr.B	8,8 / A193 B7	10,9	12,9
Bolting DN	M12 (1/2'')	41,16	84,28	117,6	142,1
	M14 (9/16'')	66,64	132,3	186,2	225,4
	M16 (5/8'')	102,9	205,8	289,1	347,9
	M18 (3/4'')	142,1	284,2	396,9	475,3
	M20 (3/4'')	196	401,8	568,4	676,2
	M22 (7/8'')	259,7	539	764,4	911,4
	M24 (1'')	338,1	695,8	980	1176
	M27 (1''1/8)	499,8	1029	1470	1764
	M30 (1''1/4)	666,4	1421	1960	2352

Information provided as an indication and subject to possible modification

PTFE WAFER CONCENTRIC BUTTERFLY VALVE EXCELLENCE RANGE TTV
DUCTILE IRON BODY-CF8M DISC AND PTFE SEAT

FLOW COEFFICIENT Kv (m3 / h) :

DN	Opening Angle								
	10°	20°	30°	40°	50°	60°	70°	80°	90°
32-40	3	4	8	17	25	35	45	56	70
50	3	6	14	22	37	60	95	147	164
65	4	7	10	22	48	78	140	160	201
80	5	12	29	52	88	156	216	281	359
100	9	21	48	87	147	234	346	519	627
125	19	35	78	148	232	372	562	761	995
150	28	48	108	203	324	536	865	1211	1471
200	35	91	206	320	554	952	1427	2163	2509
250	43	143	329	562	865	1471	2336	3460	3936
300	69	216	476	770	1341	2206	3460	4758	5865

HEAD LOSS CALCULATIONS :

Δp = (Q / Kv)² x SG

Q : flow in m³/h

Δp : Head loss in bar

SG : Specific gravity (= 1 for water)

Kv : Volume of water in m³/h, that will flow through a given restriction or valve opening with a pressure drop of 1 bar at 20ºC)

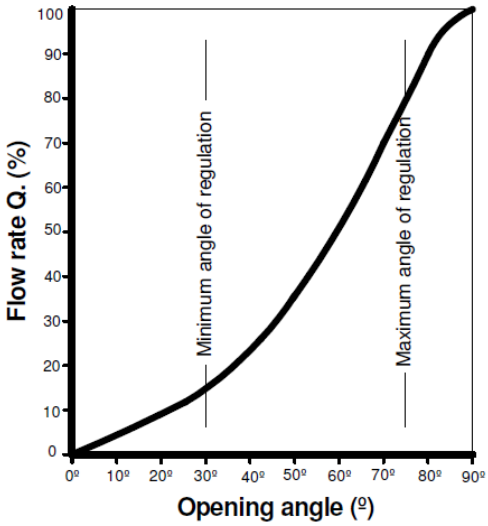

Information provided as an indication and subject to possible modification

PTFE WAFER CONCENTRIC BUTTERFLY VALVE EXCELLENCE RANGE TTV
DUCTILE IRON BODY-CF8M DISC AND PTFE SEAT

REPAIRABILITY :



SEAT AND INSERT

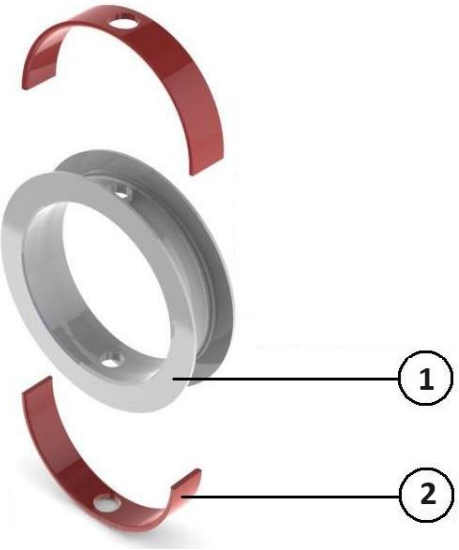

HANDLE



	DN	40	50	65	80	100	125	150	200	250	300
Seat (1)	Ref.	9831380	9831381	9831382	9831383	9831384	9831385	9831386	9831387	9831388	9831389
Kit of 2 inserts (2)	Ref.	9831390	9831391	9831392	9831393	9831394	9831395	9831396	9831397	9831398	9831399
Handle	Ref.	9831331		9831332	9831333		9831334		9831335	9831336	9831337

Information provided as an indication and subject to possible modification

PTFE WAFER CONCENTRIC BUTTERFLY VALVE EXCELLENCE RANGE TTV
DUCTILE IRON BODY-CF8M DISC AND PTFE SEAT

MATERIALS :

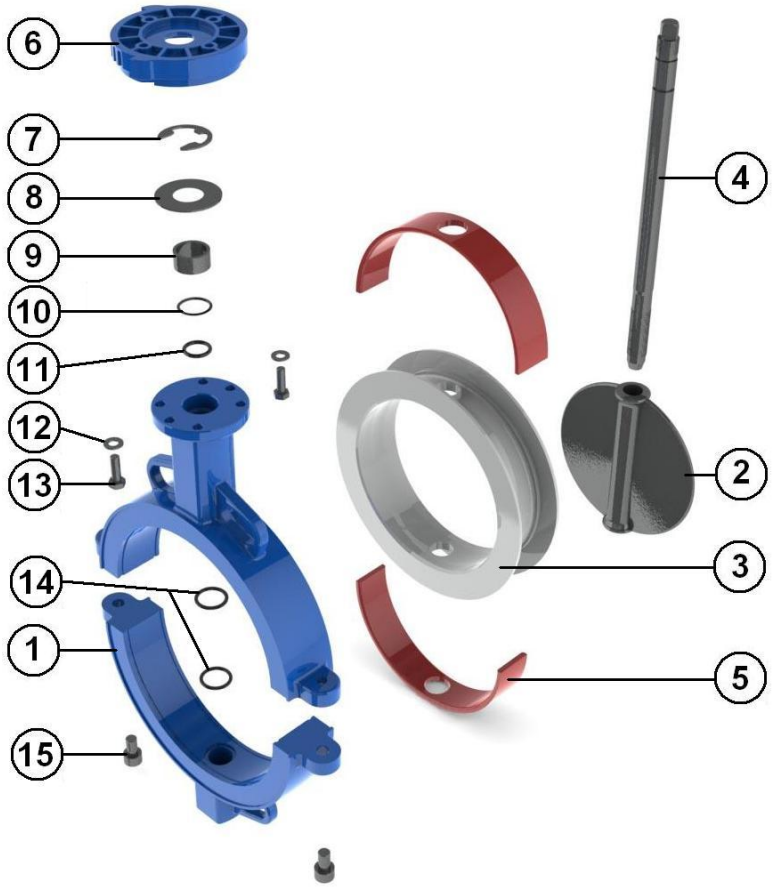

Item	Designation	Materials
1	Body	Ductile iron EN GJS-500-7 rilsan coated color RAL 5024 250-300 µ thickness
2	Disc	ASTM A351 CF8M
3	Seat	PTFE
4	Stem DN40-50 and 150-300	SS 17 4-PH (630)
4	Stem DN65-125	AISI 316
5	Insert	Silicone
6	Plate	Aluminium
7	Circlips	AISI 316
8	Ring	
9	Socket	
10	O ring	FKM
11	O ring	FKM
12	Washer	AISI 316
13	Plate screw	A4
14	O ring	FKM
15	Body screw	A4
	Lever	Aluminium ADC10 with epoxy painting 50µ thickness

Information provided as an indication and subject to possible modification

PTFE WAFER CONCENTRIC BUTTERFLY VALVE EXCELLENCE RANGE TTV
DUCTILE IRON BODY-CF8M DISC AND PTFE SEAT

GEARBOX MATERIALS REF. 1197 :

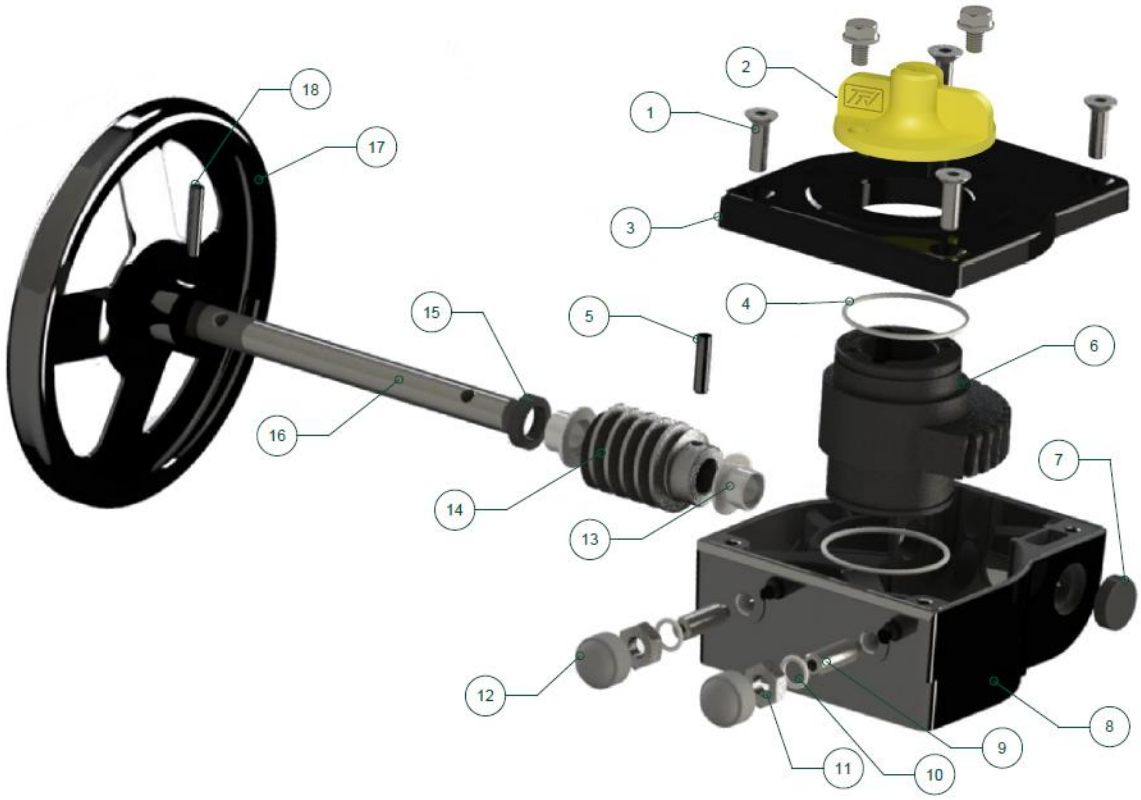

Item	Designation	Materials Ref. 1197
1	Screw	AISI 304
2	Indicator	PVC
3	Cover	Aluminium
4	O ring	NBR
5	Pin	Carbon steel
6	Quadrant	Ductile iron EN GJS-400-15
7	Gasket	NBR
8	Body	Aluminium
9	Adjusting bolt	Carbon steel
10	Washer	Galvanized steel
11	Nut	Galvanized steel
12	Cap	NBR 70
13	Bushing	Bronze
14	Worm	Carbon steel 45
15	Gasket	NBR
16	Shaft	Carbon steel 45
17	Handwheem	Carbon steel
18	Pin	Carbon steel

Information provided as an indication and subject to possible modification

PTFE WAFER CONCENTRIC BUTTERFLY VALVE EXCELLENCE RANGE TTV
DUCTILE IRON BODY-CF8M DISC AND PTFE SEAT

SIZE (in mm) :

- **Valves :**

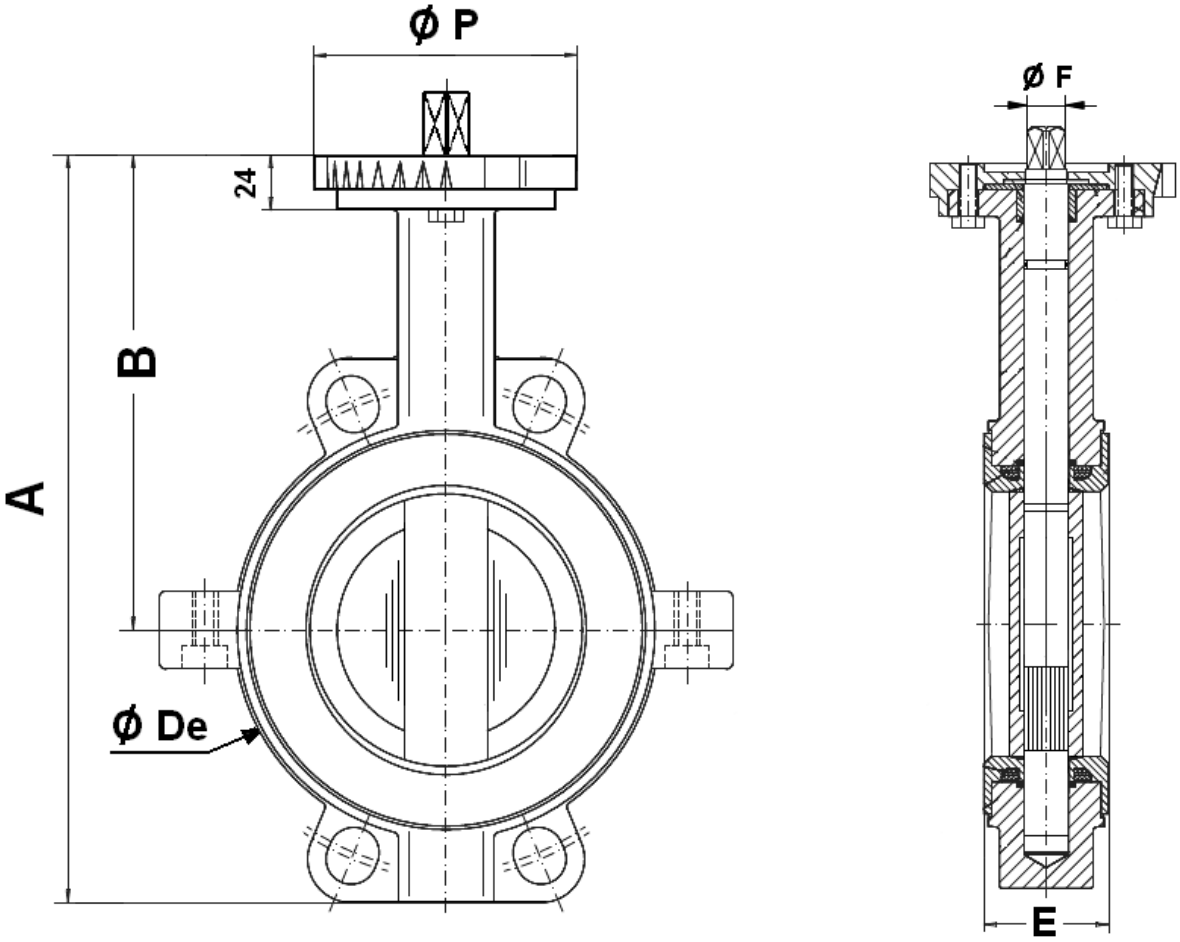

DN	32/40	50	65	80	100	125	150	200	250	300
A	205	226	242	262	290	326	348	438	448	515
B	140	156	161	167	184	207	215	257	248	280
Ø De	83	103	117	134	150	185	205	270	320	373
E	33	43	46	46	52	56	56	60	68	78
Ø F	9.5	9.5	12	14	14	17	17	21	23	26.5
Ø P	88	88	88	88	88	105	105	105	150	150
Weight (Kg)	2.5	4	4.57	5.18	6.5	9.5	10.37	16.8	31	42

Information provided as an indication and subject to possible modification

PTFE WAFER CONCENTRIC BUTTERFLY VALVE EXCELLENCE RANGE TTV
DUCTILE IRON BODY-CF8M DISC AND PTFE SEAT

STANDARD LEVERS SIZE (in mm) :

DN 32 – 150 :

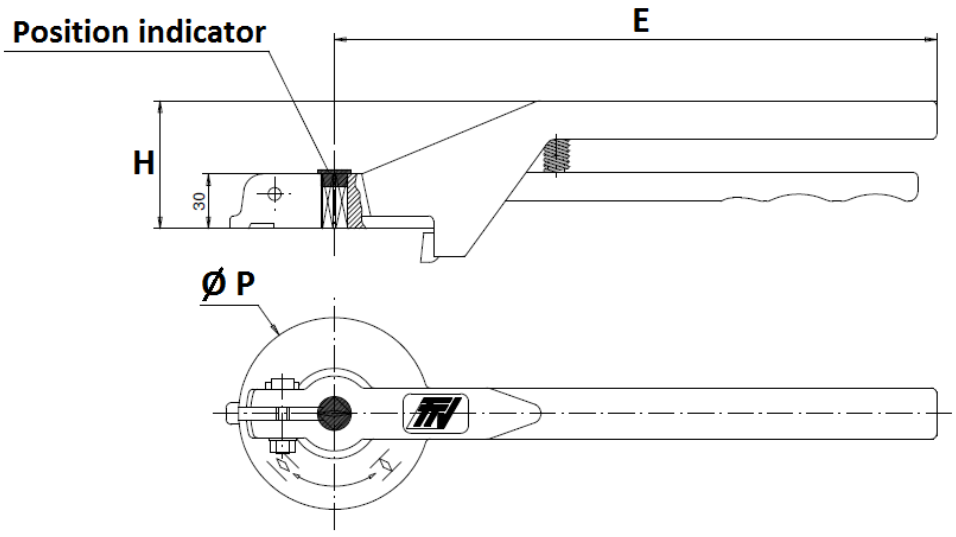

DN	32-100	125-150
E	205	330
H	57	70
Ø P	88	105

Information provided as an indication and subject to possible modification

PTFE WAFER CONCENTRIC BUTTERFLY VALVE EXCELLENCE RANGE TTV
DUCTILE IRON BODY-CF8M DISC AND PTFE SEAT

ASTM A351 CF8M STAINLESS STEEL LEVERS SIZE (in mm) (ON REQUEST) :

DN 40 - 100

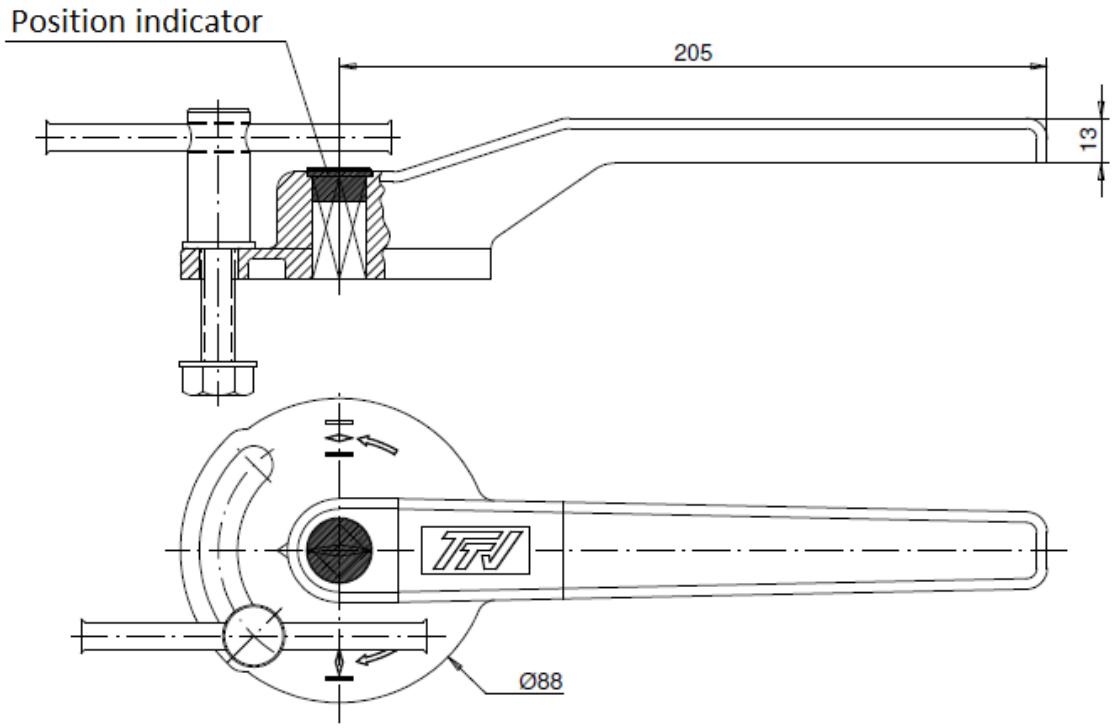

DN 125 - 200

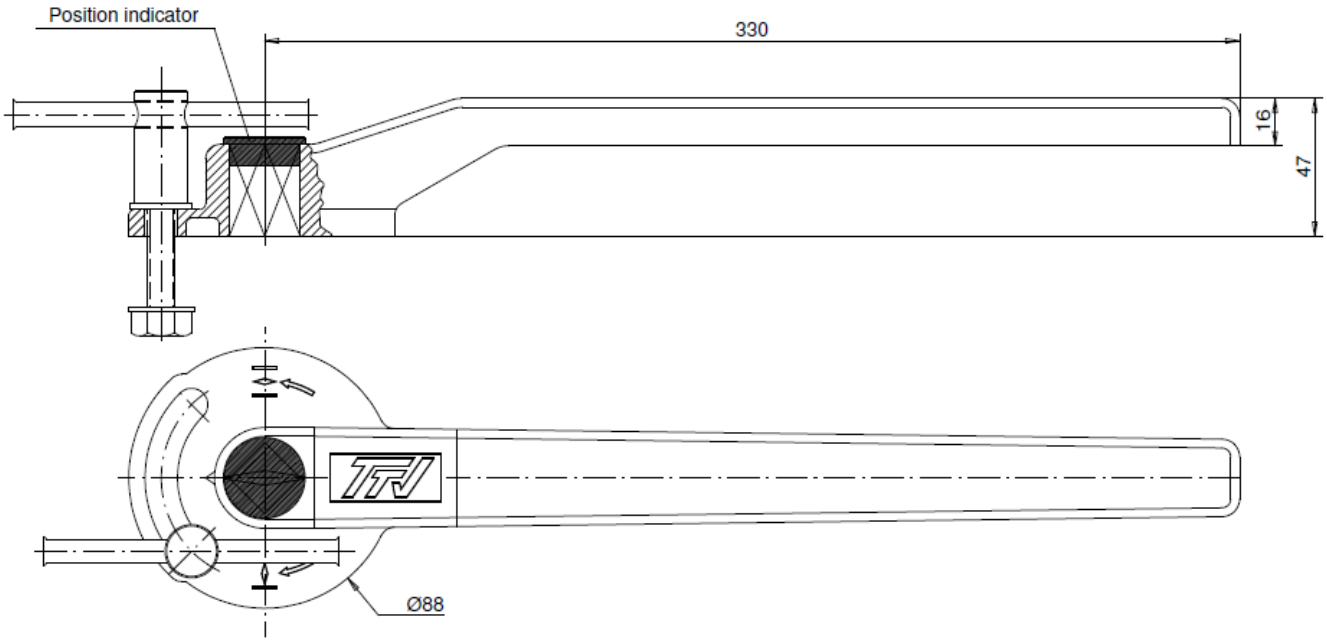

Information provided as an indication and subject to possible modification

PTFE WAFER CONCENTRIC BUTTERFLY VALVE EXCELLENCE RANGE TTV
DUCTILE IRON BODY-CF8M DISC AND PTFE SEAT

ISO MOUNTING PAD AND STEM SIZE (in mm) :

DN 40 - 200

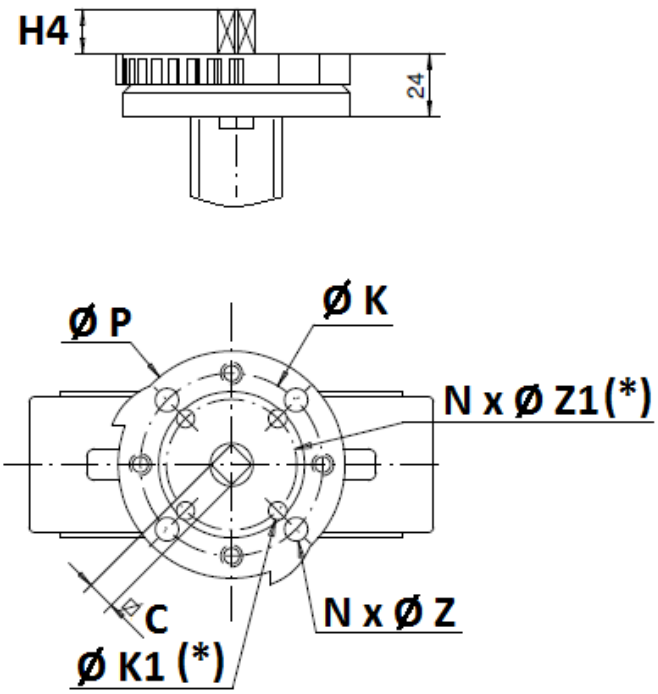

DN 250 – 300

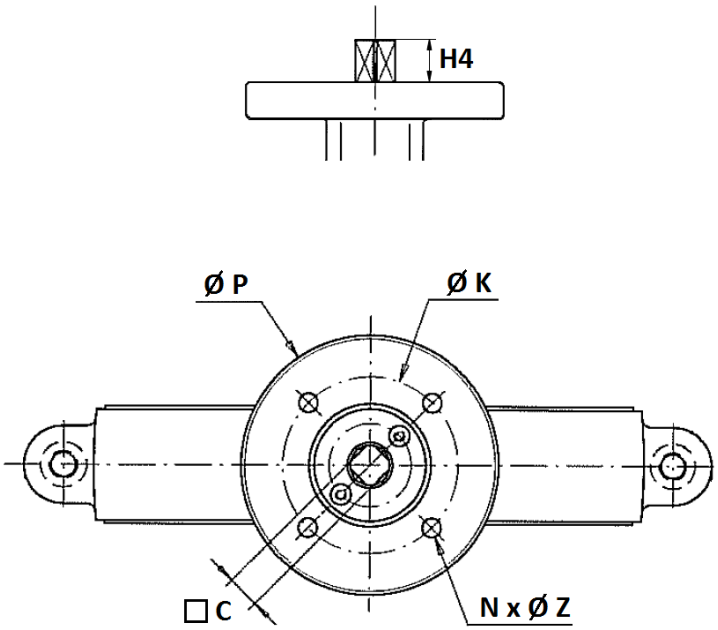

(*) : Only from DN32 to DN100 (see installation for ISO plate F05 next page)

DN	32/40	50	65	80	100	125	150	200	250	300
H4	14	14	16	16	20	20	20	24	24	24
C	8	8	9	11	11	14	14	17	19	22
Ø K	70	70	70	70	70	70	70	70	102	102
ISO	F07	F07	F07	F07	F07	F07	F07	F07	F10	F10
N x Ø Z	4 x 9	4 x 9	4 x 9	4 x 9	4 x 9	4 x 9	4 x 9	4 x 9	4 x 11	4 x 11
Ø K1	50	50	50	50	50	-	-	-	-	-
ISO 1	F05	F05	F05	F05	F05	-	-	-	-	-
N x Ø Z1	4 x 7	4 x 7	4 x 7	4 x 7	4 x 7	-	-	-	-	-
Ø P	88	88	88	88	88	105	105	105	150	150

Information provided as an indication and subject to possible modification

PTFE WAFER CONCENTRIC BUTTERFLY VALVE EXCELLENCE RANGE TTV
DUCTILE IRON BODY-CF8M DISC AND PTFE SEAT

ISO PLATE INSTALLATION FOR DN32-100 ISO F05 :

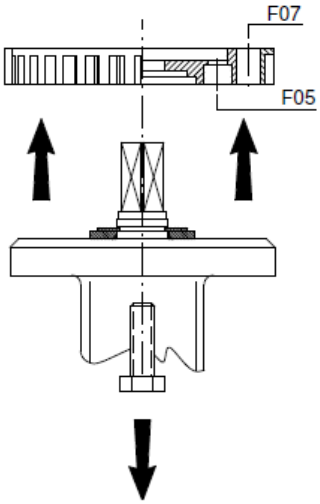

Unscrew and remove the flange

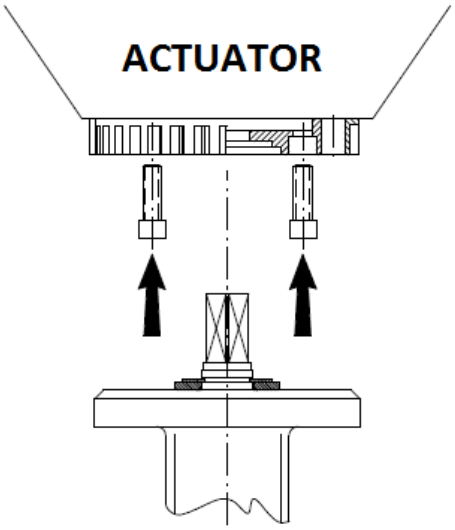

Screw the flange to the actuator with hexagon socket screws

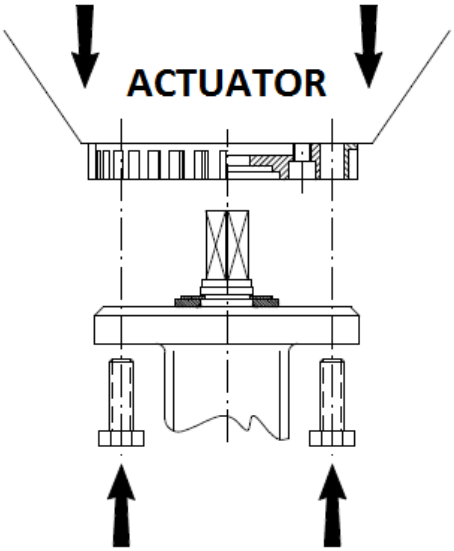

Screw the valve to the flange

Information provided as an indication and subject to possible modification

PTFE WAFER CONCENTRIC BUTTERFLY VALVE EXCELLENCE RANGE TTV
DUCTILE IRON BODY-CF8M DISC AND PTFE SEAT

GEARBOX SIZE REF.1197 (in mm) :

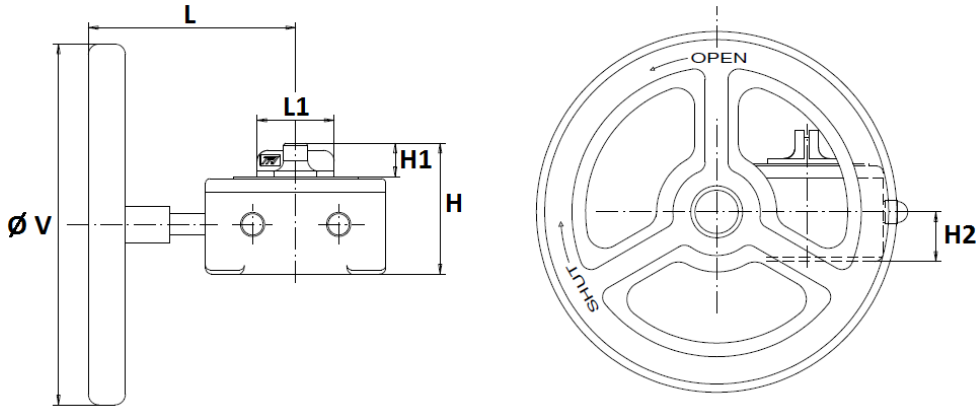

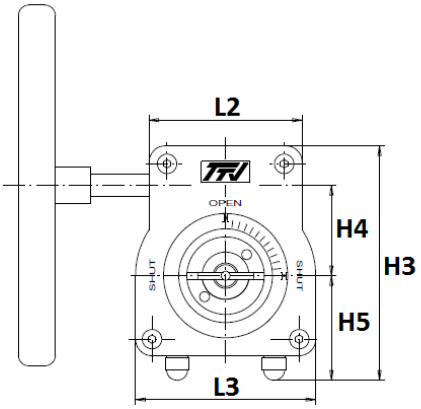

ISO plate size :

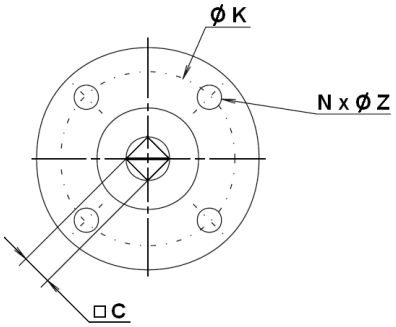

DN	32/50	65	80/100	125/150	200	250	300
L	115	115	115	115	115	223.5	223.5
L1	43	43	43	43	43	55	55
L2	85	85	85	85	85	110	110
L3	100	100	100	100	100	142	142
H	73	73	73	73	73	103	103
H1	19	19	19	19	19	33	33
H2	27.5	27.5	27.5	27.5	27.5	42	42
H3	130	130	130	130	130	176	176
H4	50	50	50	50	50	60	60
H5	58	58	58	58	58	82	82
Ø V	140	140	140	200	200	300	300
C	8	9	11	14	17	19	22
Ø K	70	70	70	70	70	102	102
ISO	F07	F07	F07	F07	F07	F10	F10
N x Ø Z	4 x M8	4 x M8	4 x M8	4 x M8	4 x M8	4 x M10	4 x M10
Weight (Kg)	1.35	1.35	1.35	1.75	1.75	4	4
Ref.	1197050	1197065	1197100	1197150	1197200	1197250	1197300

Information provided as an indication and subject to possible modification

PTFE WAFER CONCENTRIC BUTTERFLY VALVE EXCELLENCE RANGE TTV
DUCTILE IRON BODY-CF8M DISC AND PTFE SEAT

CHAIN GEARBOX SIZE REF.1194 (in mm) :

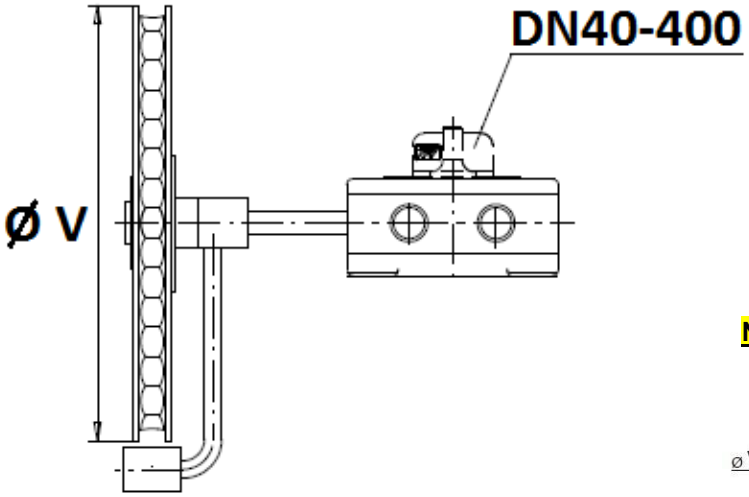

Chain size :

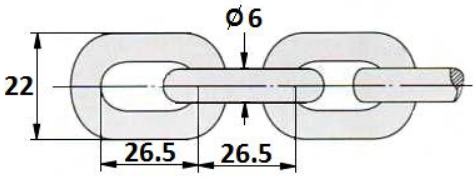

NEW TYPE (MODIFICATION IN PROGRESS) :

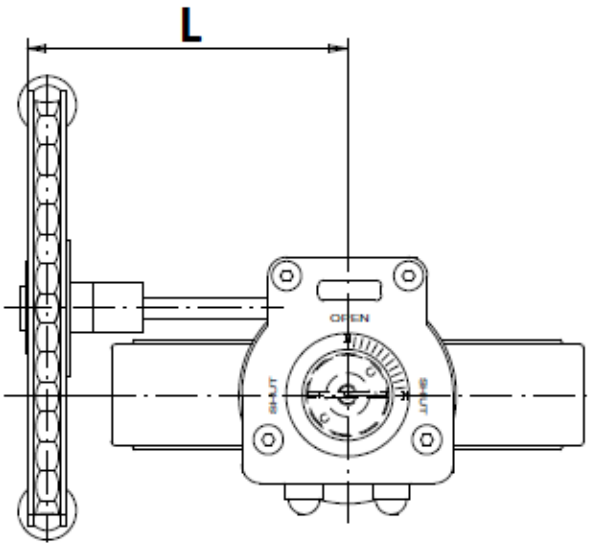

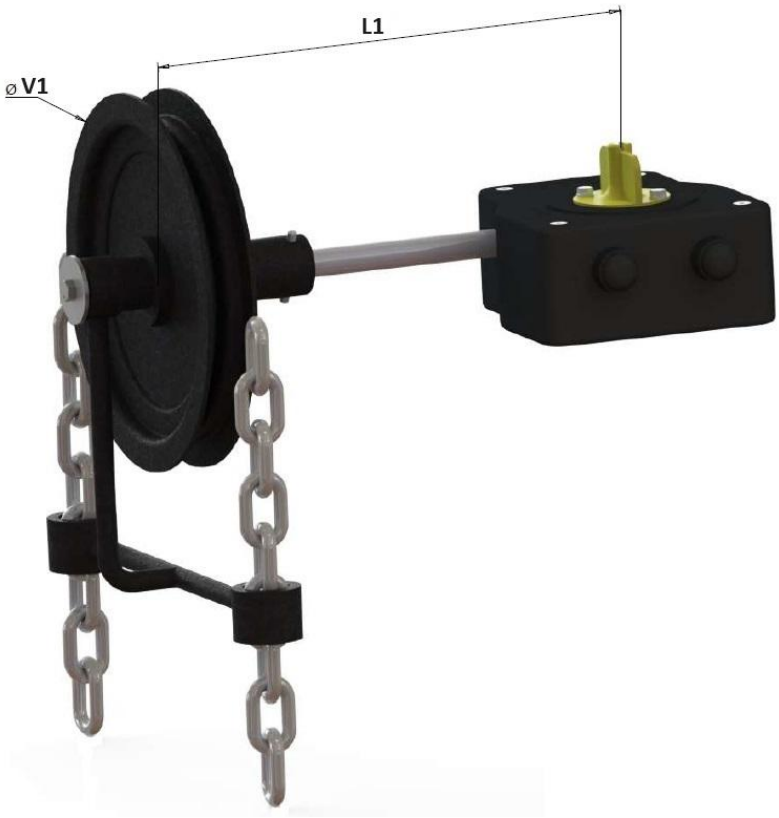

DN	32/50	65	80/100	125/150	200	250	300
L	120			215		325	
L1	110					250	
Ø V	160			210		300	
Ø V1							
Weight (in Kg)	2.35	2.35	2.35	2.75	2.75	6.8	6.8
Ref.	1194050	1194065	1194100	1194150	1194200	1194250	1194300

Information provided as an indication and subject to possible modification

PTFE WAFER CONCENTRIC BUTTERFLY VALVE EXCELLENCE RANGE TTV
DUCTILE IRON BODY-CF8M DISC AND PTFE SEAT

GEARBOX SPECIFICATIONS :

DN	32/50	65	80/100	125/150	200	250	300
Ref.	1197050	1197065	1197100	1197150	1197200	1197250	1197300
Ratio factor	37 : 1	37 : 1	37 : 1	37 : 1	37 : 1	36 : 1	36 : 1
Number of cycles for opening or closing	9.25	9.25	9.25	9.25	9.25	9	9
Input torque (Nm)	9	9	9	9	9	18.5	18.5
Output torque (Nm)	250	250	250	250	250	500	500

DISC AND NECK SIZE (in mm) :

(Ø mini pipe)

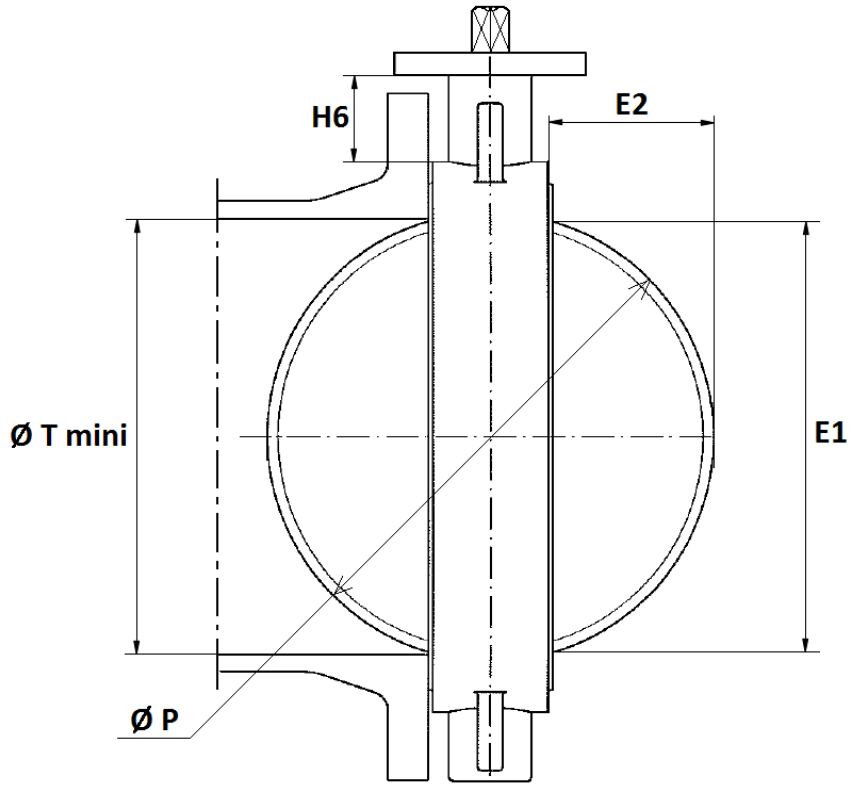

DN	32/40	50	65	80	100	125	150	200	250	300
E1	23	24.5	46	65	85	109	136	188	238	289
E2	3.5	3.5	9.5	17	24	33.5	45.5	69	90	110.5
H6	76	82	80	80	88	93	89	99	71	76
Ø T mini	26	27.5	49	68	88	112	139	191	241	292
Ø P	40	50	65	80	100	123	147	198	248	299

Information provided as an indication and subject to possible modification

PTFE WAFER CONCENTRIC BUTTERFLY VALVE EXCELLENCE RANGE TTV
DUCTILE IRON BODY-CF8M DISC AND PTFE SEAT

SIZE (in mm) :

- **Square lever for special key (30x30 mm) :**

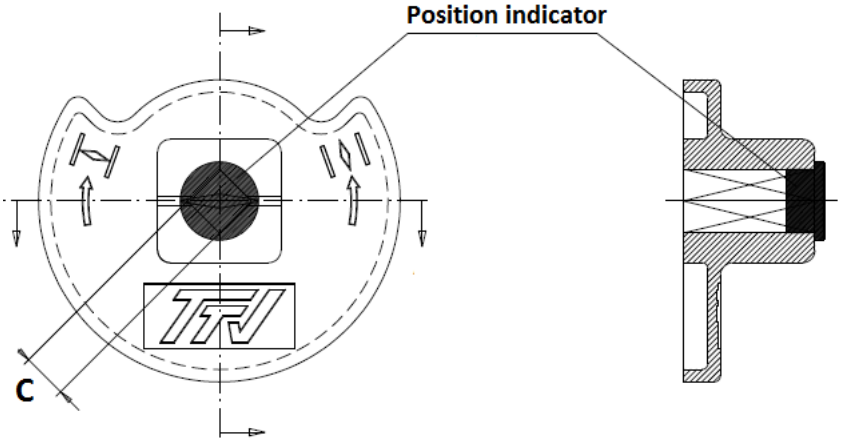

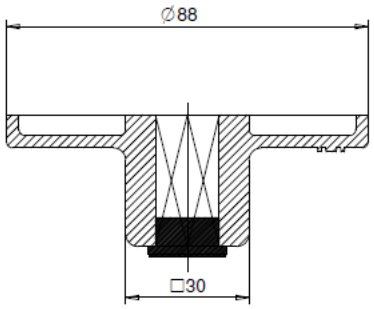

DN	32-50	65	80-100	125-150	200
C	8x8	9x9	11x11	14x14	17x17
Ref.	9866501	9866502	9866503	9866504	9866505

Information provided as an indication and subject to possible modification

PTFE WAFER CONCENTRIC BUTTERFLY VALVE EXCELLENCE RANGE TTV
DUCTILE IRON BODY-CF8M DISC AND PTFE SEAT

BETWEEN FLANGES SIZE (in mm) :

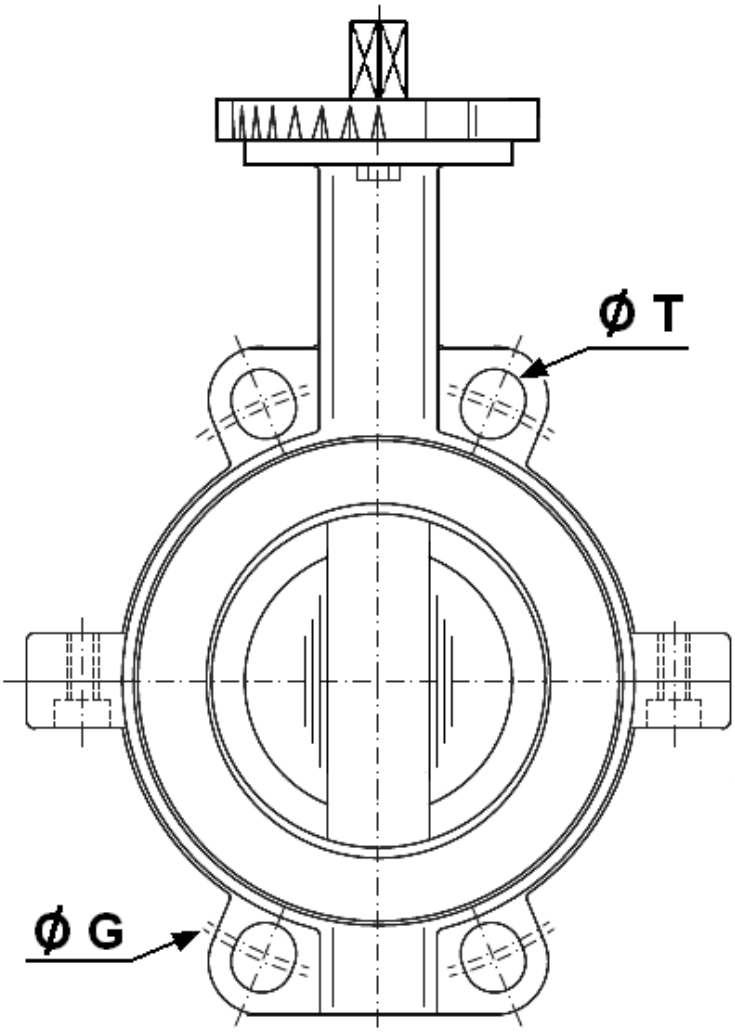

	DN (mm)	32	40	50	65	80	100	125	150	200	250	300
	NPS (")	1"1/4	1"1/2	2"	2"1/2	3"	4"	5"	6"	8"	10"	12"
PN10	Ø G	100	110	125	145	160	180	210	240	295	350	400
	Ø T	18	18	18	18	18	18	18	23	23	23	23
PN16	Ø G	100	110	125	145	160	180	210	240	295	355	410
	Ø T	18	18	18	18	18	18	18	23	23	27	27
Class 150	Ø G	88.9	98.5	120.6	139.7	152.4	190.5	215.9	241.3	298.5	362	431.8
	Ø T	16	16	19	19	19	19	23	23	23	26	26

Information provided as an indication and subject to possible modification

PTFE WAFER CONCENTRIC BUTTERFLY VALVE EXCELLENCE RANGE TTV
DUCTILE IRON BODY-CF8M DISC AND PTFE SEAT

STANDARDS :

- Manufacturer certified ISO 9001:2015
- Designing according to ISO 10631 and EN 593
- DIRECTIVE 2014/68/EU: For liquids or Gas of Group 1
    - DN32-50 : Risk category I, CE marking
    - DN65-300 : Risk category II, CE0038 or CE0094 marking
- Certificate 3.1 on request
- Tests according to EN 12266-1, Rate A
- Between flanges according to EN 1092-1 PN10/16
- ISO 5211 mounting pad
- Length according to :
    - ISO 5752 short series 20
    - EN 558 series 20 (NF 29305)
    - BS 5155 series 4
    - DIN 3202 part 3, series K1
    - API 609 Table 1 up to DN600
    - ASME B16.10 Table 8 column 3
- ATEX Group II Category 2 G/2D Zone 1 & 21 Zone 2 &22 (on request)
- The valves are suitable for use in a safety instrumented system up to SIL 2 in low demand mode. Under consideration of the minimum required hardware fault tolerance HFT= 1 the valves may be used in a redundant architecture up to SIL 3.
- **FDA PTFE** seat
- PTFE seat compatible with foodstuffs according to the rule **CE 1935/2004 (article 3)**

INSTALLATION INSTRUCTIONS :

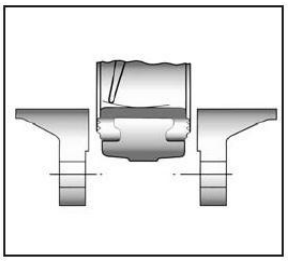

Half open valve introduction

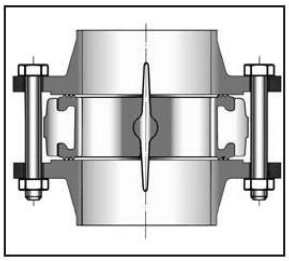

Complete opened disc valves when screw tightening

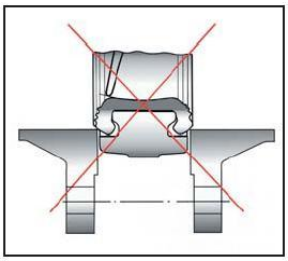

ADVICE : Our opinion and our advice are not guaranteed and SFERACO shall not be liable for the consequences of damages.
The customer must check the right choice of the products with the real service conditions.

Information provided as an indication and subject to possible modification

TUBOTEK | Article references

1145 | Article mapping

Appendix 1

Tubotek SKU	Sferaco / Sectoriel	Grouping ID	DN / PN
VTWITS-040	1145040	VTWITS-XXX	DN32-40 PN10/16
VTWITS-050	1145050	VTWITS-XXX	DN50 PN10/16
VTWITS-065	1145065	VTWITS-XXX	DN65 PN10/16
VTWITS-080	1145080	VTWITS-XXX	DN80 PN10/16
VTWITS-100	1145100	VTWITS-XXX	DN100 PN10/16
VTWITS-125	1145125	VTWITS-XXX	DN125 PN10/16
VTWITS-150	1145150	VTWITS-XXX	DN150 PN10/16
VTWITS-200	1145200	VTWITS-XXX	DN200 PN10/16
VTWITSG-250	1145250	VTWITS-XXX	DN250 PN10/16
VTWITSG-300	1145300	VTWITS-XXX	DN300 PN10/16

Source: Tubotek import - test kopie syveco - C / D / H.
Technical data and certifications: original manufacturer documentation.
SKU and grouping identifiers reproduced from the import file.